◈ Ground points

- This shows ground points of the harness.

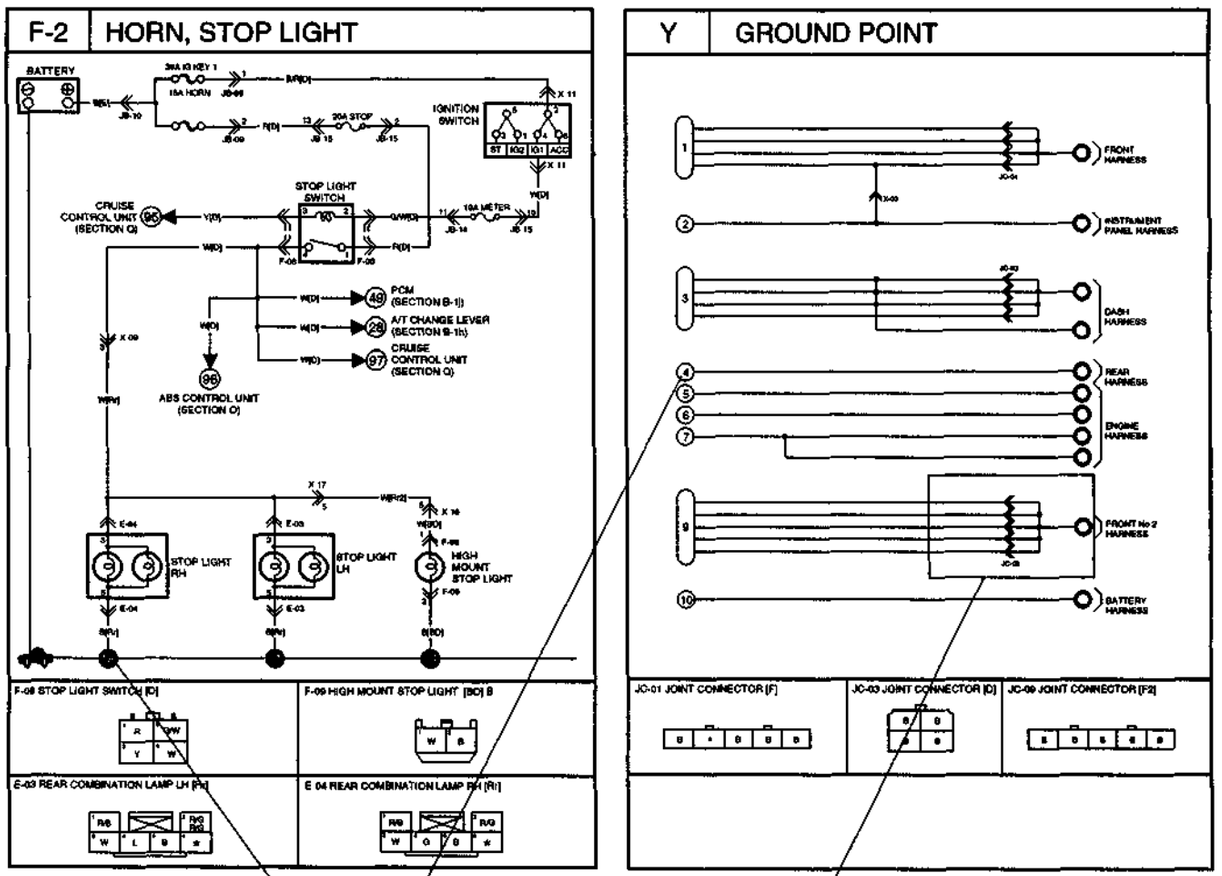

On circuit diagrams and ground points

This ground connection numbers in system circuit diagrams correspond to those in the ground point diagram.

Ground indication

On Vehicle	Indication
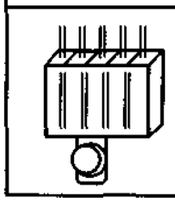	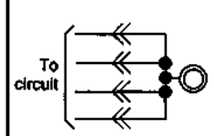

◈ System circuit diagram/connector diagram

- These diagrams show the circuits for each system, from the power supply to the ground. The power supply side is on the upper part of the page, the ground side on the lower part. The diagrams describe circuits with the ignition switch off. Below is an explanation of the various points in the diagram.

System code

System name

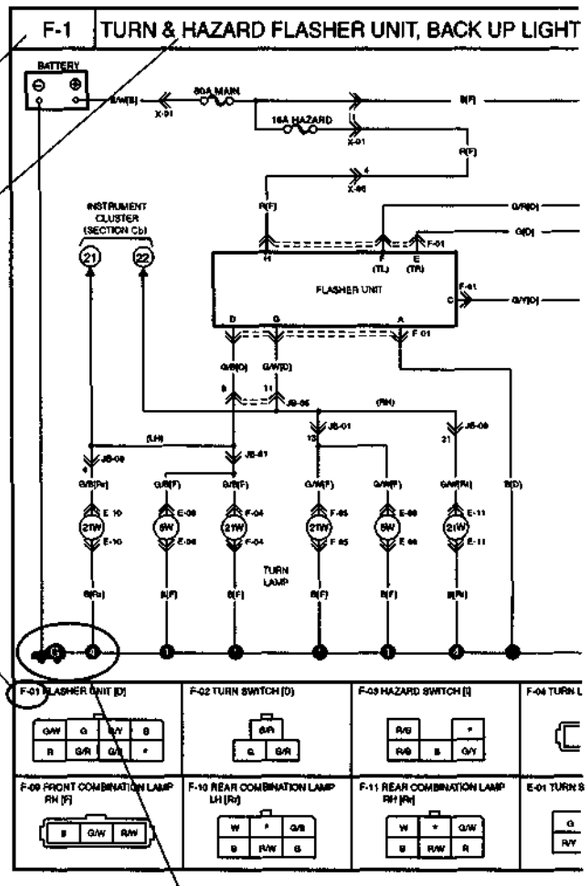

Connector code

The prefix letter indicates the system in whitch the connector is used.

JB : Joint box connections
X : Common connectors
A : Charging **system/starting** system connectors
B : Engine control system connectors
C : Gauge control system connectors
D : Wiper system connectors
E : lighting system connectors
F : Signal system connectors
G : Air-conditioning system connectors
H : Transmission Control system connectors
I : Interior lamp system connectors
J : Audio/radio connectors
K : Power window/power door lock system connectors
L : Remote control mirror system connectors
M : Sliding sunroof system connectors
N : Power **steering/4-wheel** steering system connectors
O : Anti-lock brake system connectors
P : Power **seat/seat heater** system connectors
Q : Auto cruisecontrol system connectors
R : Auto adjusting suspension system connectors
S : Passive shoulder belt **control/Airbag** system connectors
T : Others
Y : Ground connector

Ground numbers

A harness ground is represented differently than a unit ground

Types of grounds	Symbol
Harness	
Unit	

The number indicates that the circuit continues to the related system diagram.

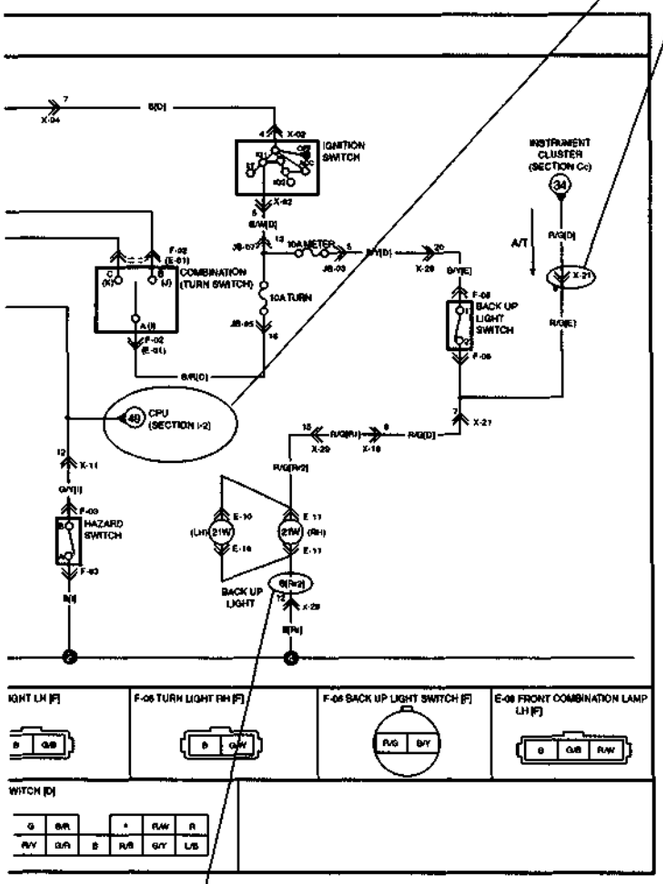

Connector symbols

- Male and female connectors are represented as follows in the circuit and connector diagrams.

		Circuit diagram symbol	Connector diagram symbol
Male	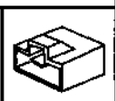	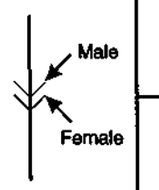	
Female			

- Like connectors are linked by dashed lines between the connector symbols.
- Connector diagrams show connector on the harness side. The terminal indicates the view from the harness side.

Example)

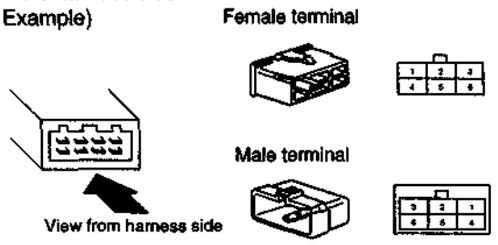

- Colors for connectors except milk-white are given in locations.
- Unusea terminals are indicated by * .
- Letter after wire color [ex: W/G(F)] indicates harness wire is located in(F=Front harness).
  See next page for complete list of harness abbreviations.

Wire color code (harness symbol)

- Two-color wires are indicated by a two-letter symbol. The first indicates the base color of the wire, the second the color of the stripe.
  For example :

  W/R is a white wire with red stripe
  BR/Y is brown wire with a yellow stripe.

CODE	COLOR	CODE	COLOR
B	BLACK	P	PINK
BR	BROWN	R	RED
G	GREEN	S	SILVER(LIGHT BLUE)
GY	GRAY	T	TAWNY
L	BLUE	V	VIOLET
LG	LIGHT GREEN	W	WHITE
O	ORANGE	Y	YELLOW

Symbol
Example)

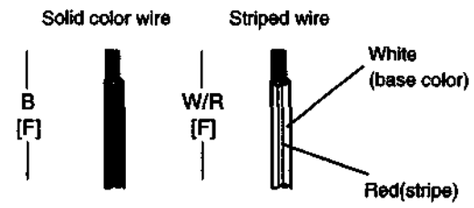

◈ Routing diagram

- The routing diagram shows where electrical components are on the system circuit diagram by call outline and connector symbols.
- Specified values are listed beside the routing diagram or on the following page.

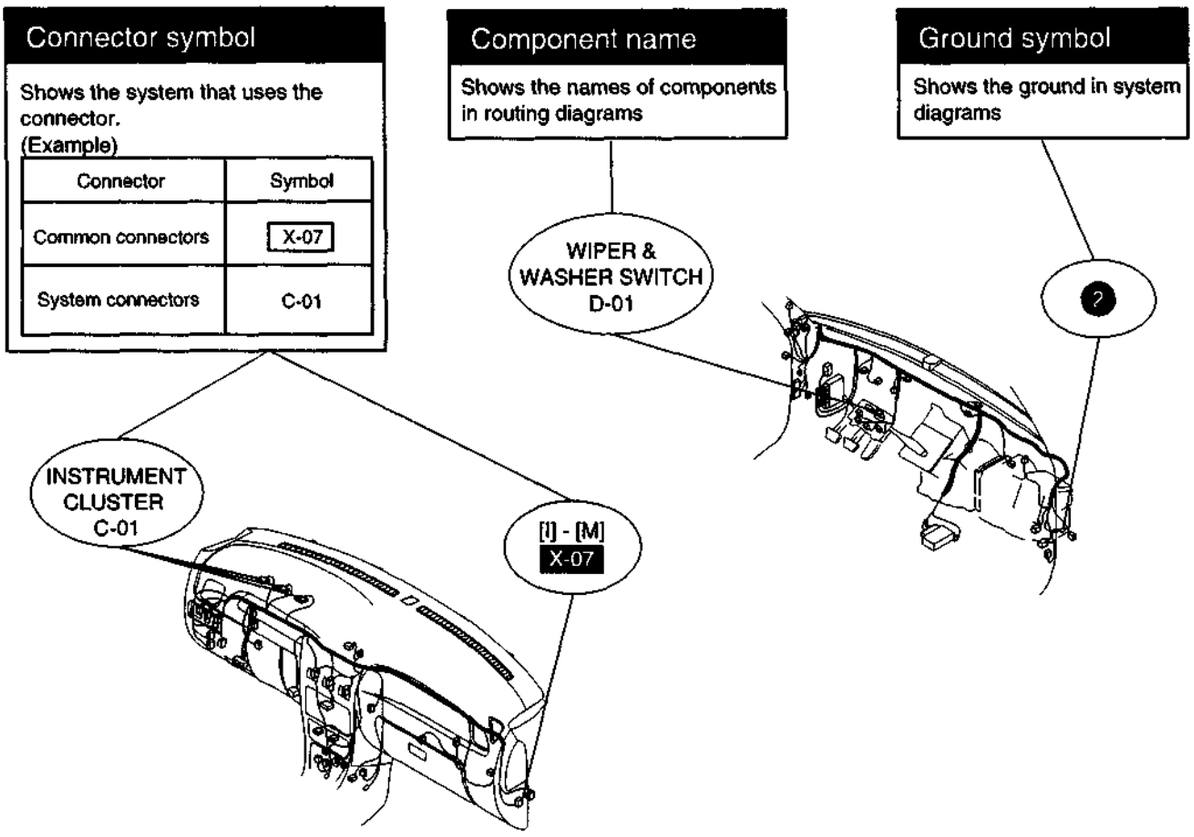

◈ Harness symbols

DESCRIPTION OF HARNESS	SYMBOL	DESCRIPTION OF HARNESS	SYMBOL
MAIN HARNESS	[M]	FRONT DOOR LEFT HARNESS	[Dr]
ENGINE HARNESS	[E]	FRONT DOOR RIGHT HARNESS	[Dr2]
CONTROL HARNESS	[C]	REAR DOOR LEFT HARNESS	[Dr3]
INSTRUMENT PANEL HARNESS	[I]	REAR DOOR RIGHT HARNESS	[Dr4]
FLOOR HARNESS	[FL]	TAIL GATE EXTENSION HARNESS	[FL2]
BATTERY HARNESS	[B]	TAIL GATE HARNESS	[TG]
ROOF HARNESS	[Rm]		

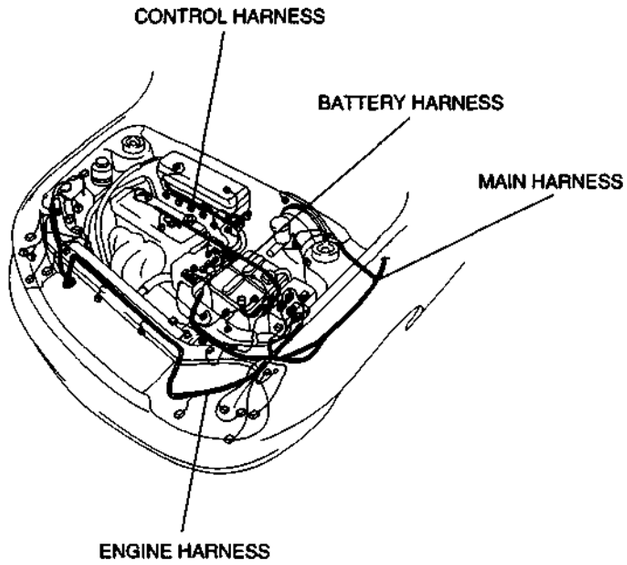
CONTROL HARNESS
BATTERY HARNESS
MAIN HARNESS
ENGINE HARNESS

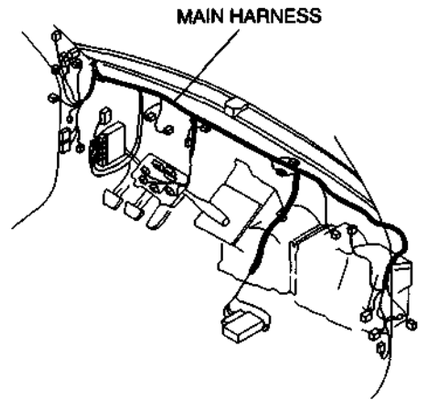
MAIN HARNESS

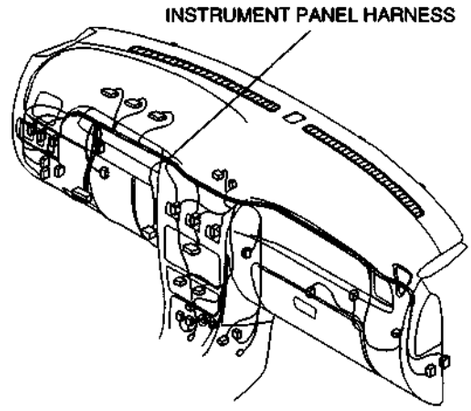
INSTRUMENT PANEL HARNESS

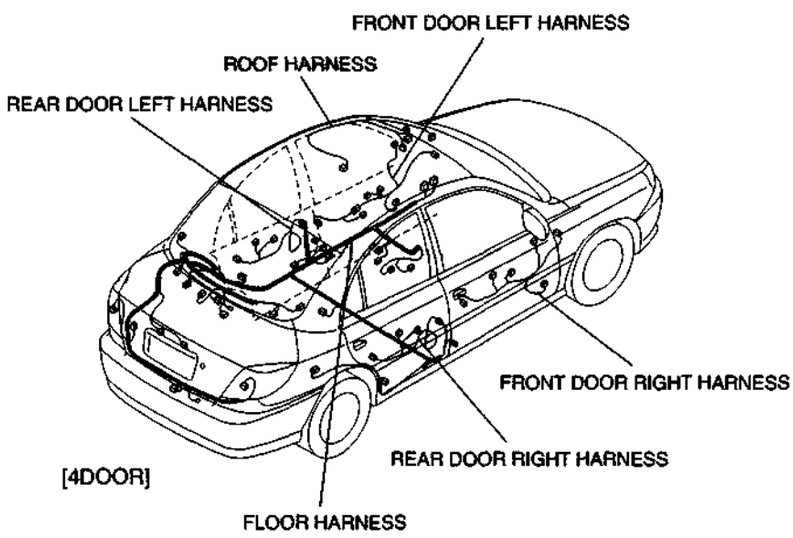
FRONT DOOR LEFT HARNESS
ROOF HARNESS
REAR DOOR LEFT HARNESS
FRONT DOOR RIGHT HARNESS
REAR DOOR RIGHT HARNESS
[4DOOR]
FLOOR HARNESS

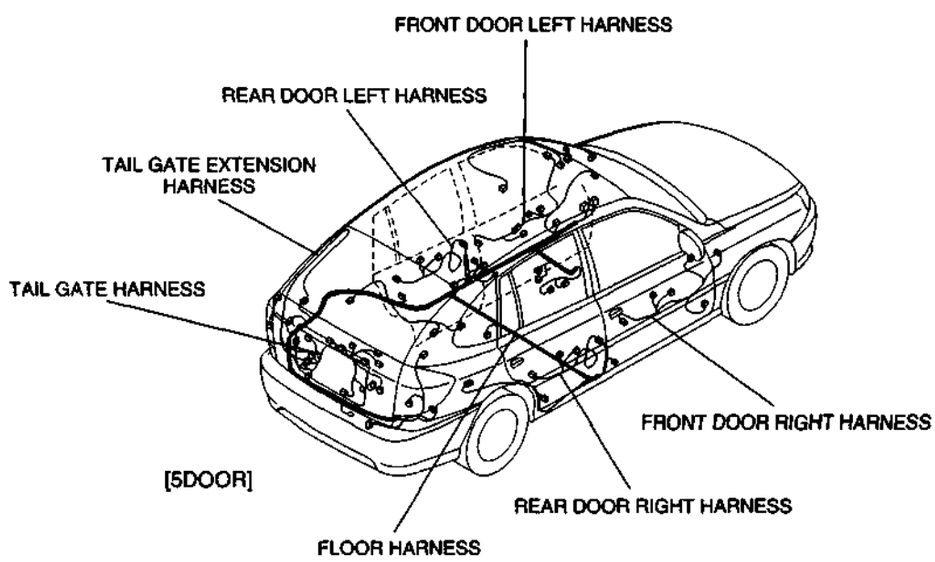
FRONT DOOR LEFT HARNESS
REAR DOOR LEFT HARNESS
TAIL GATE EXTENSION HARNESS
TAIL GATE HARNESS
FRONT DOOR RIGHT HARNESS
[5DOOR]
REAR DOOR RIGHT HARNESS
FLOOR HARNESS

Symbols

Symbol	Meaning
Battery	●Generates electricity through chemical reaction. ●Supplies direct current to circuits.
Ground(1) Ground(2)	●Connecting point to vehicle body or other ground wire where current flows from positive to negative terminal of battery. ● Ground(1) indicates a ground point to body through wire harness. Ground(2) indicates point where components is grounded directly to body. Remarks ● Current will not flow through a circuit if ground is faulty.
Fuse(1) (Box) Fuse(2) (Cartridge) Main fuse/ Fusible link	● Melts when current flow exceeds that specified for circuit, interrupts current flow. Precautions ● Do not replace with fuses exceeding specified capacity. <Blade type> <Tube type> <Cartridge type> <Fusible link>
Transistor(1) Collector(C) Base (B) NPN Emitter(E)	● Electrical switching component. ● Turns on when voltage is applied to the base(B) Collector indication mark ● Reading code 2 S C 828 A — Revision mark Semiconductor Number of terminals A:High-frequency PNP B:Low-frequency pnp C:High-frequency NPN D:Low-frequency npn
Transistor(2) Collector(C) Base (B) PNP Emitter(E)	
Lamp 3.4W	● Emits light and generates heat when current flows through filament.

Symbol	Meaning
Resistance	● A resistor with a constant value. ● Mainly used to protect electrical components in circuits by maintaining rated voltage. ● Reading resistance values. <Colored> No.1 color band No.2 color band No.3 color band No.4 color band Narrow — Wide

Color	No.1	No.2	No.3	No.4
	Resistance values		Multiplier	Tolerance
Black	0	0	$\times 10^0$	
Brown	1	1	$\times 10^1$	
Red	2	2	$\times 10^2$	
Orange	3	3	$\times 10^3$	
Yellow	4	4	$\times 10^4$	
Green	5	5	$\times 10^5$	
Blue	6	6	$\times 10^6$	
Purple	7	7	$\times 10^7$	
Grey	8	8	$\times 10^8$	
White	9	9	$\times 10^9$	
Gold			$\times 10^{-1}$	±5%
Silver			$\times 10^{-2}$	±10%
				±20%

<Numerical>

3 3 2

Third : x 10^x

Second } Resistance

First } Values

Symbol	Meaning
Motor	● Converts electrical energy into mechanical energy.
Pump	● Pulls in and discharges gases and liquids.
Cigarette lighter	● Electrical coil that generates heat.

Symbol	Meaning	Symbol	Meaning
Horn	● Generates sound when current flows.	Switch(1) Normally open(NO)	● Allows or breaks current flow by opening and closing circuits.
Speaker		Switch(2) Normally closed(NC)	
Heater	● Generates heat when current flows.	Harness (Not connected) (Connected)	● Unconnected intersecting harness. ● Connected intersecting harness.
Speed sensor	● Movement of magnet in speedometer turn contact within sensor on and off.		
Ignition switch	● Turing ignition key switches circuit to operate various component.		
Relay(1) Normally open(NO)	● Current flowing through coil produces electromagnetic force causing contact to open or close.		
Relay(2) Normally closed(NC)			
Sensor(Variable)	● Resistance changes with other components operation.	Diode	● Known as a semiconductor rectifier, the diode allows current flow in one direction only. Cathode(K) Anode(A) ← Flow of electric current
Sensor (Thermistor)	● Resistance changes with temperature.	Light-emitting diode (LED)	● A diode that lights when current flows. ● Unlike ordinary bulbs, the diode dose not generate heat when lit. Cathode(K) Anode(A) Cathode(K) Anode(A) ← Flow of current
Capacitor	● Component that temporarily stores electrical charge.		
Solenoid	● Current flowing through coil generates electromagnetic force to operate plungers.	Reference diode (Zener diode)	● Allows current to flow in one direction up to a certain voltage ; allows current to flow in the other direction once that voltage is exceeded.

	No current to coil	Current to coil
Normally open relay(NO)	No flow	Flow
Normally closed relay(NC)	Flow	No flow

W ELECTRICAL WIRING SCHEMATIC

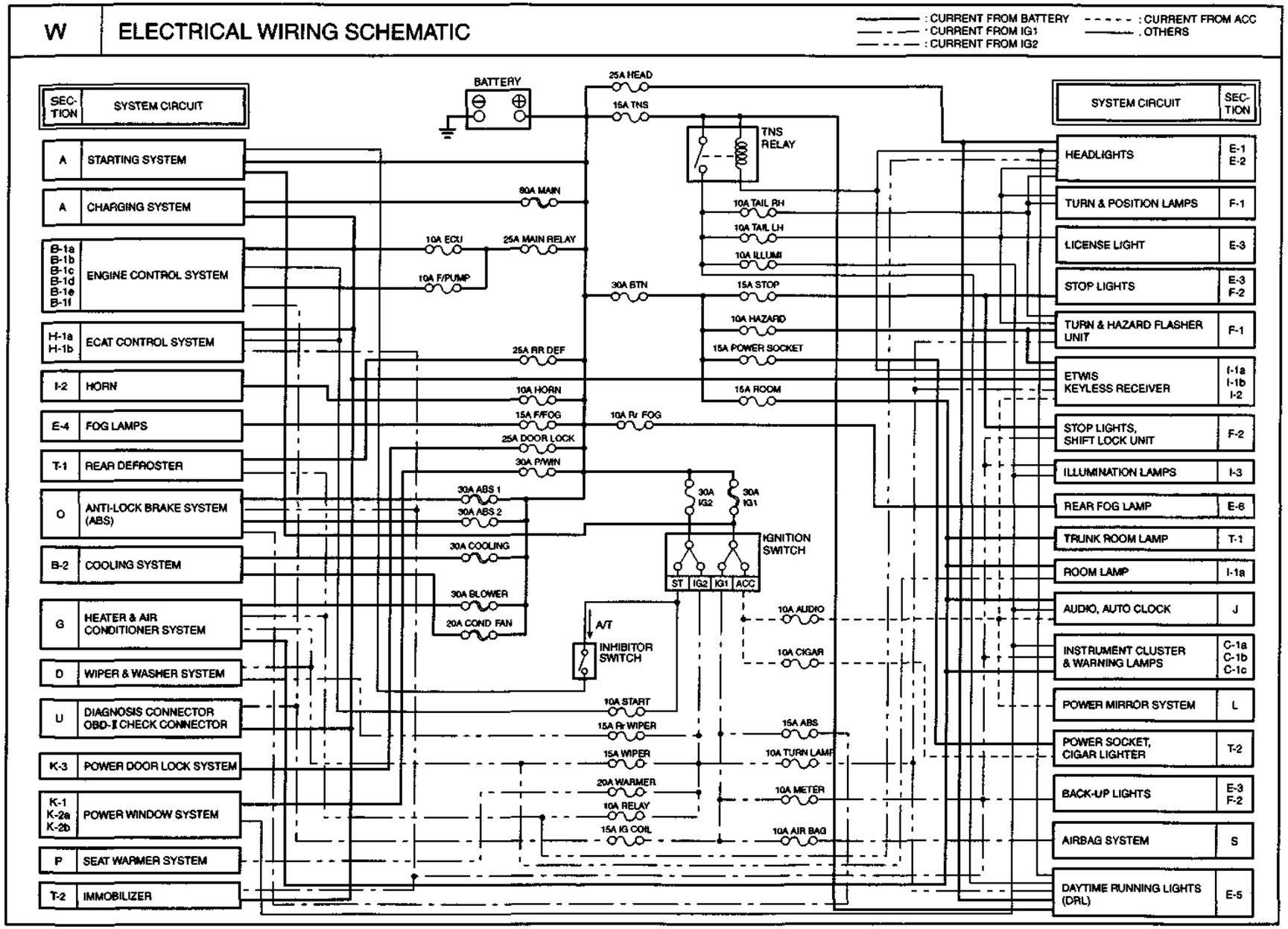

Y GROUND POINTS

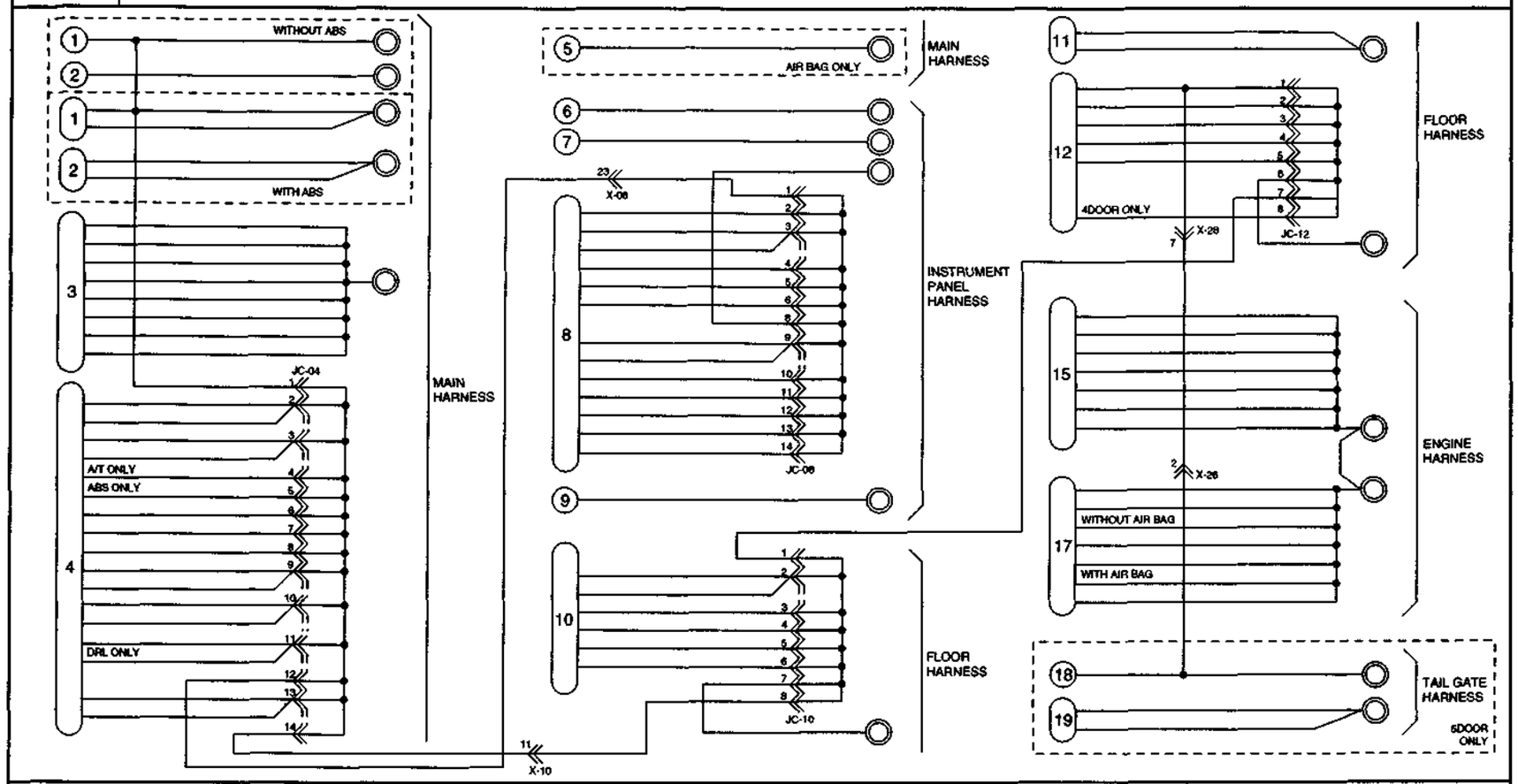

JC-04 SHORT CONNECTOR [M] < > A/T ( ) DRL

JC-08 SHORT CONNECTOR [I]

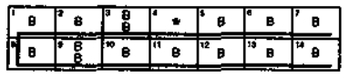

JC-10 SHORT CONNECTOR [FL] < > A/T

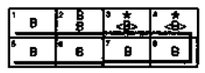

JC-12 SHORT CONNECTOR [FL] < > 5DOOR

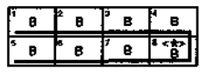

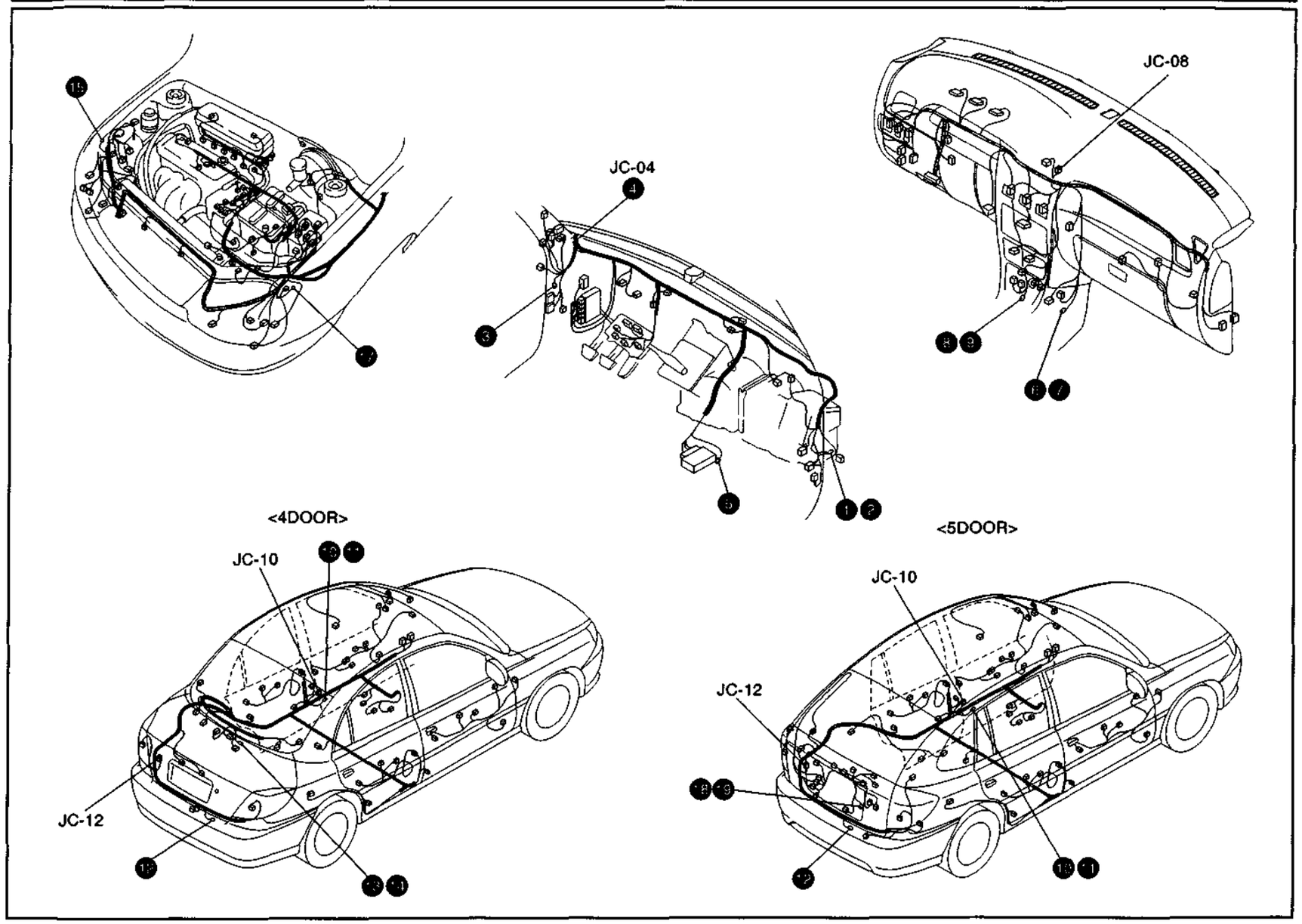
JC-08
JC-04
<4DOOR>
JC-10
JC-12
<5DOOR>
JC-10
JC-12

A STARTING & CHARGING SYSTEM

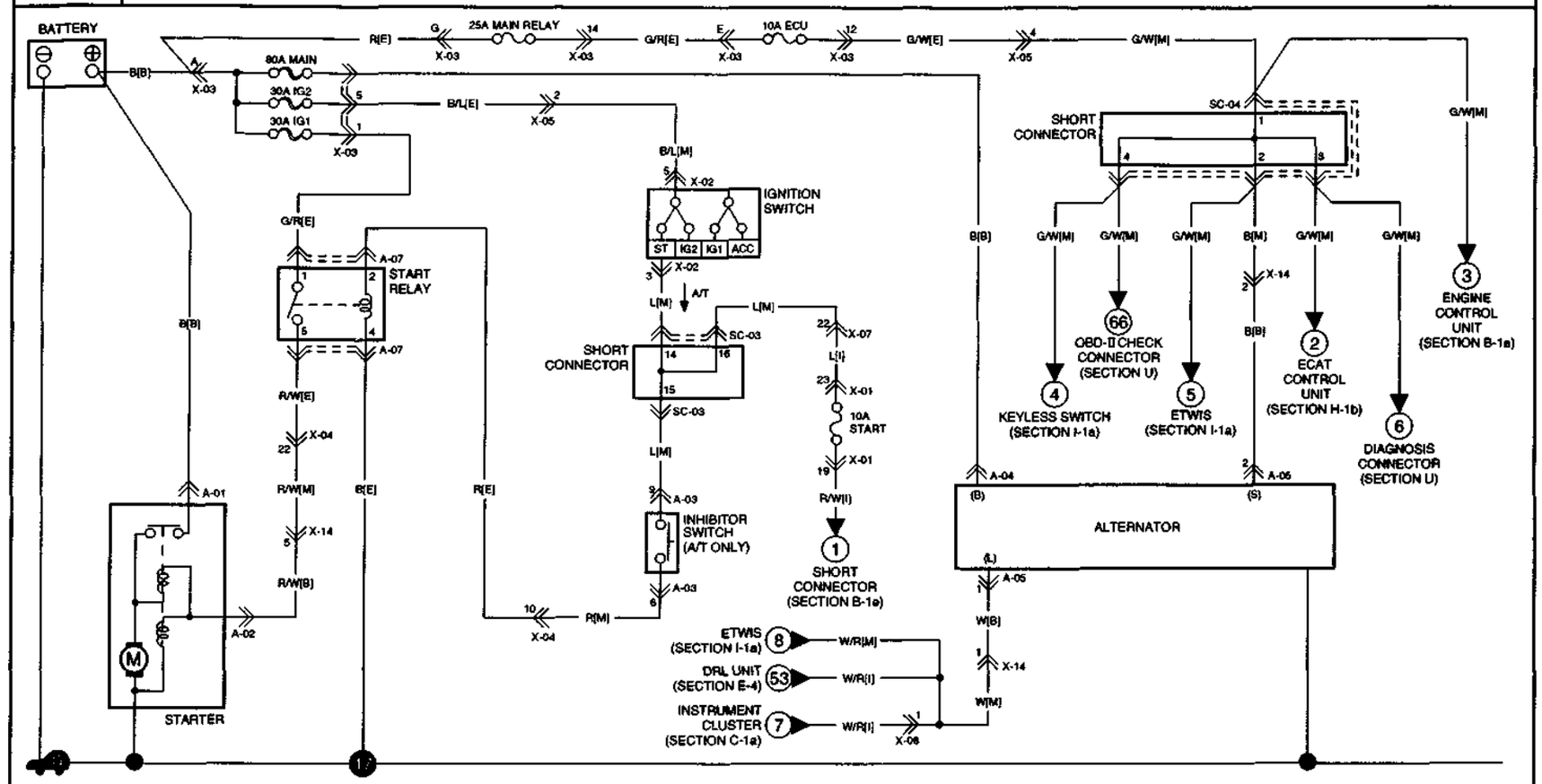

A-01 STARTER [B]

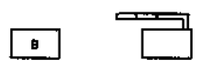

A-02 STARTER [B] B

A-03 INHIBITOR SWITCH [M]

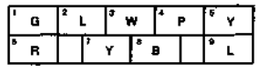

A-04 ALTERNATOR [B]

A-05 ALTERNATOR [B] GY

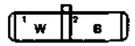

A-07 START RELAY [E]

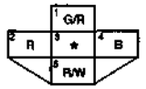

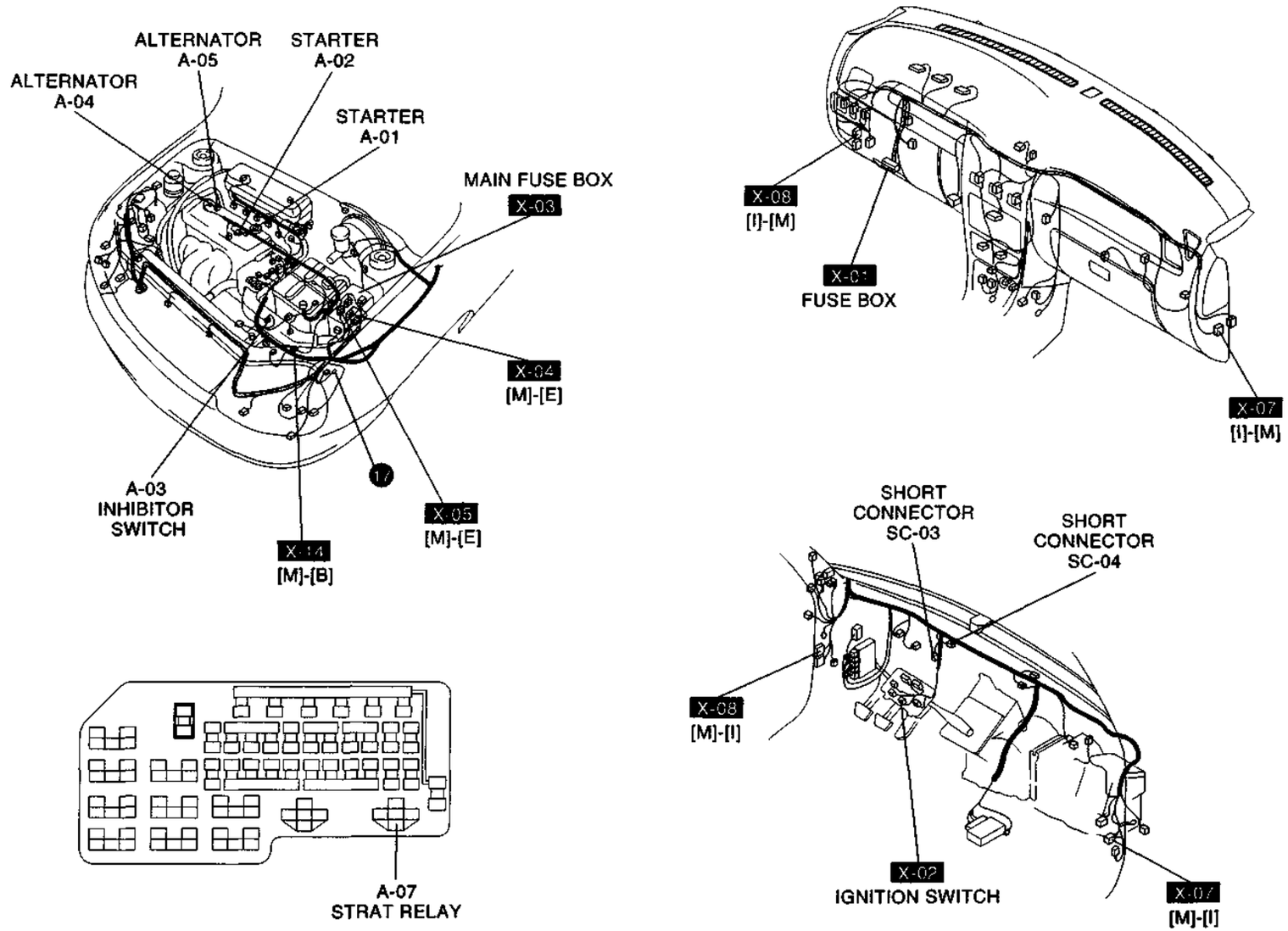
ALTERNATOR
A-05
STARTER
A-02
ALTERNATOR
A-04
STARTER
A-01
MAIN FUSE BOX
X-03
X-04
[M]-[E]
A-03
INHIBITOR
SWITCH
X-05
[M]-[E]
X-14
[M]-[B]
X-08
[I]-[M]
X-01
FUSE BOX
X-07
[I]-[M]
SHORT
CONNECTOR
SC-03
SHORT
CONNECTOR
SC-04
X-08
[M]-[I]
X-02
IGNITION SWITCH
X-07
[M]-[I]
A-07
STRAT RELAY

B-1a ENGINE CONTROL SYSTEM

( ) : EUROPE

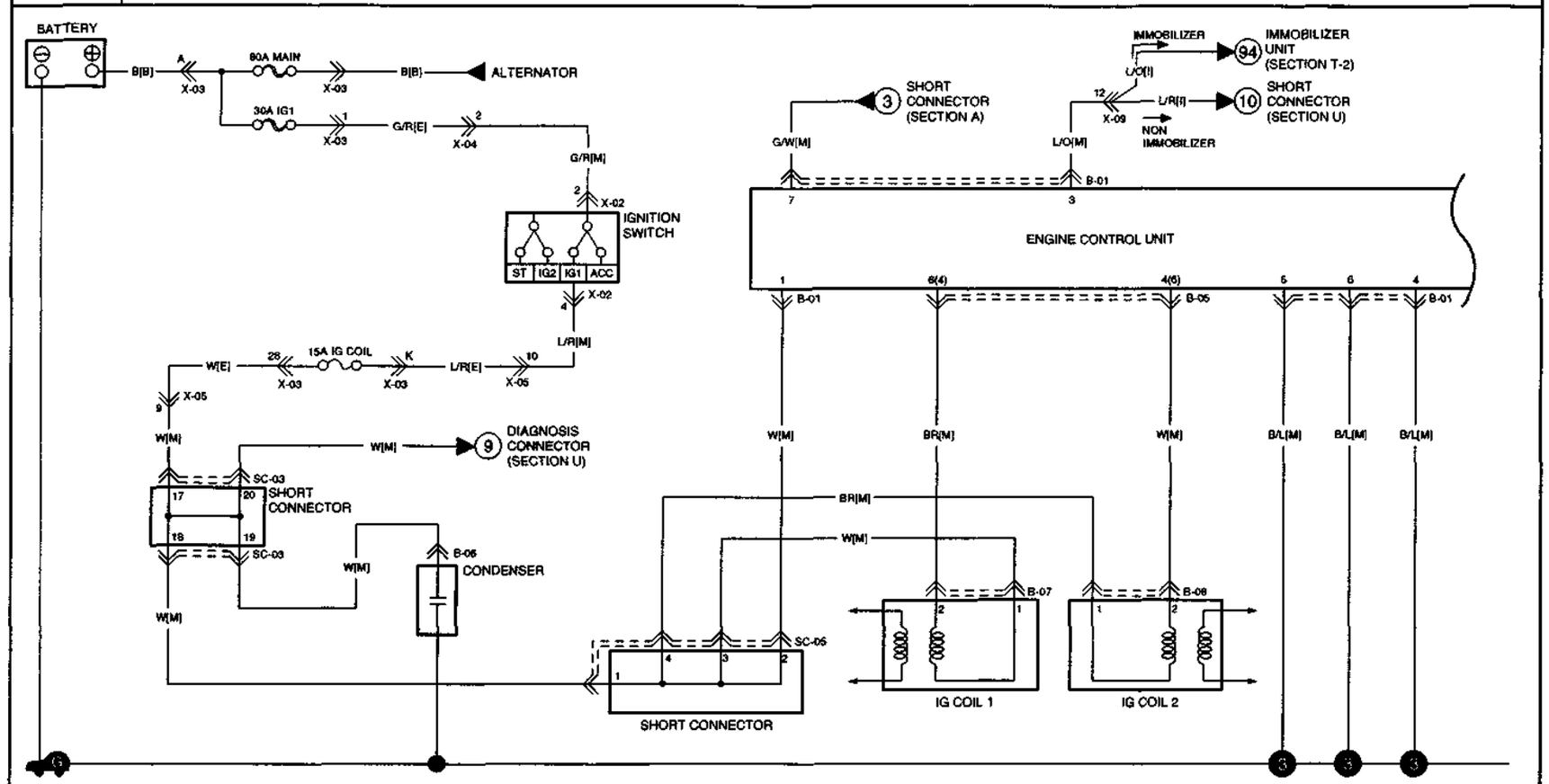

B-01 ENGINE CONTROL UNIT [M]	B-05 ENGINE CONTROL UNIT [M] ( ) : EUROPE	B-06 CONDENSER [M] GY	B-07 IG COIL 1 [M] B	B-08 IG COIL 2 [M] B
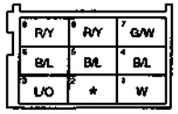	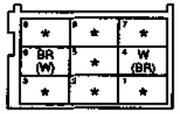		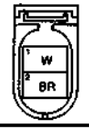	

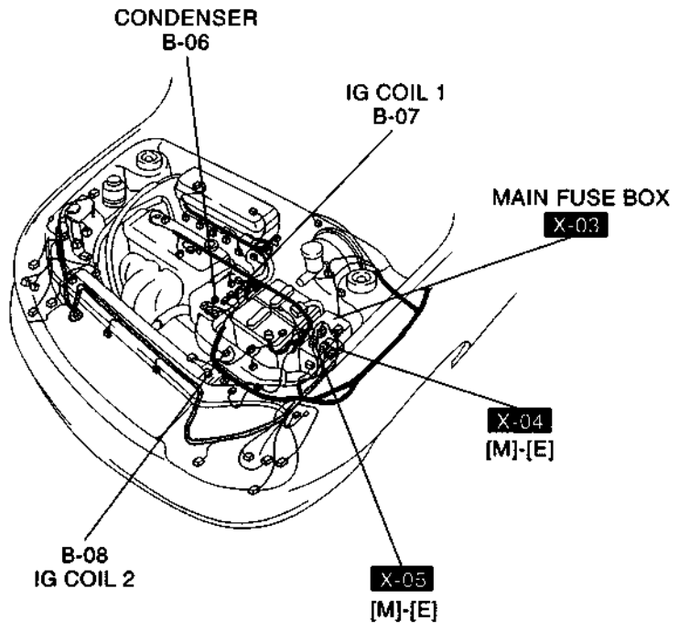
CONDENSER
B-06
IG COIL 1
B-07
MAIN FUSE BOX
X-03
X-04
[M]-[E]
B-08
IG COIL 2
X-05
[M]-[E]

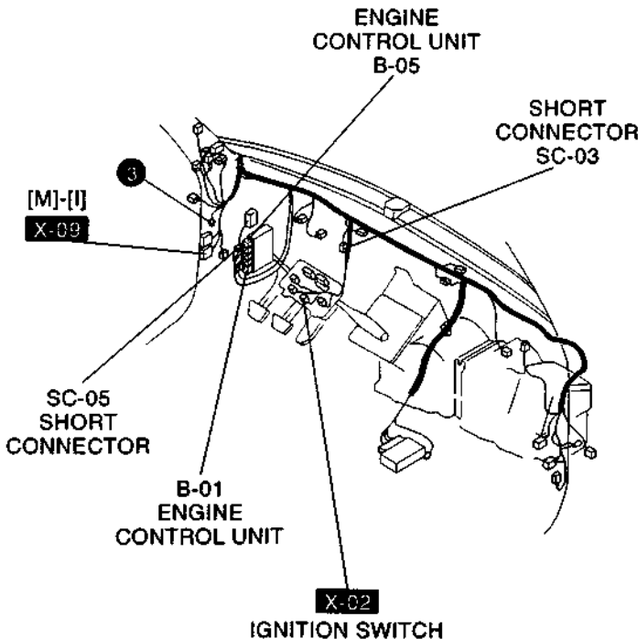
ENGINE
CONTROL UNIT
B-05
SHORT
CONNECTOR
SC-03
3
[M]-[I]
X-09
SC-05
SHORT
CONNECTOR
B-01
ENGINE
CONTROL UNIT
X-02
IGNITION SWITCH

B-1b ENGINE CONTROL SYSTEM

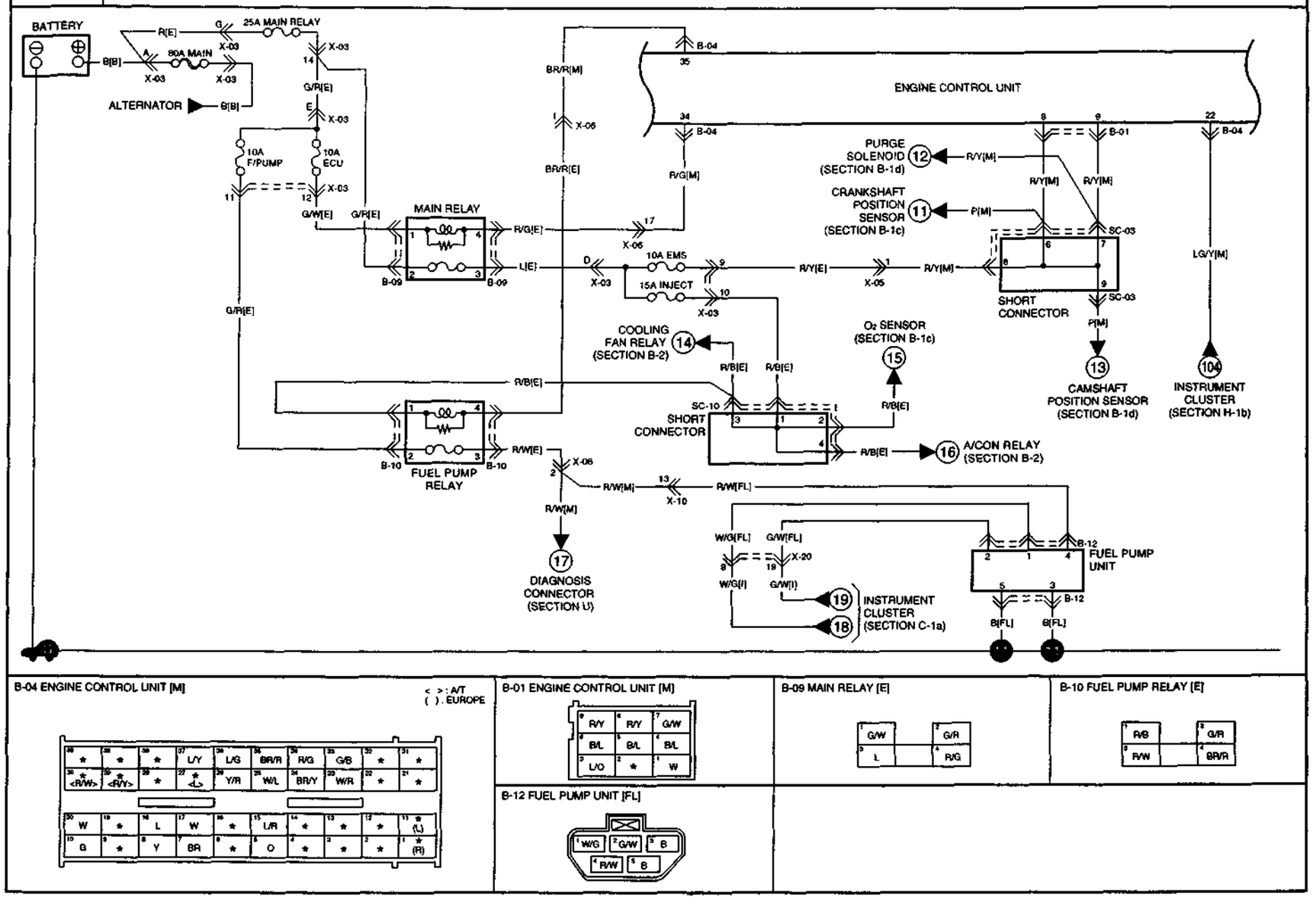

B-04 ENGINE CONTROL UNIT [M]

< > : A/T
( ) : EUROPE

B-01 ENGINE CONTROL UNIT [M]

B-09 MAIN RELAY [E]

B-10 FUEL PUMP RELAY [E]

B-12 FUEL PUMP UNIT [FL]

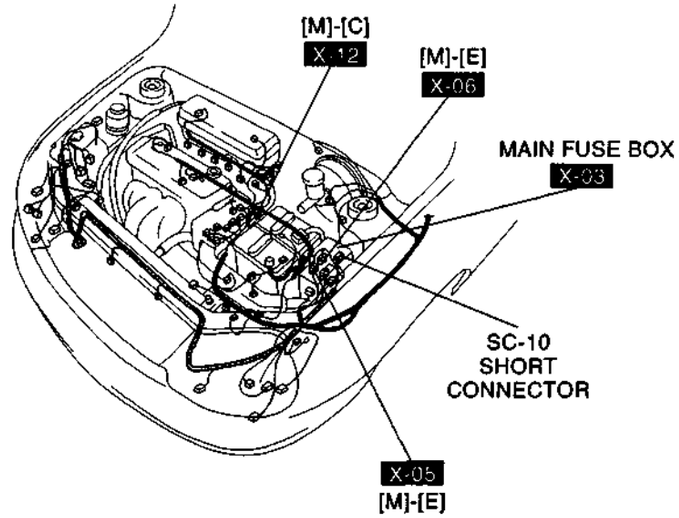
[M]-[C]
X-12
[M]-[E]
X-06
MAIN FUSE BOX
X-03
SC-10
SHORT
CONNECTOR
X-05
[M]-[E]

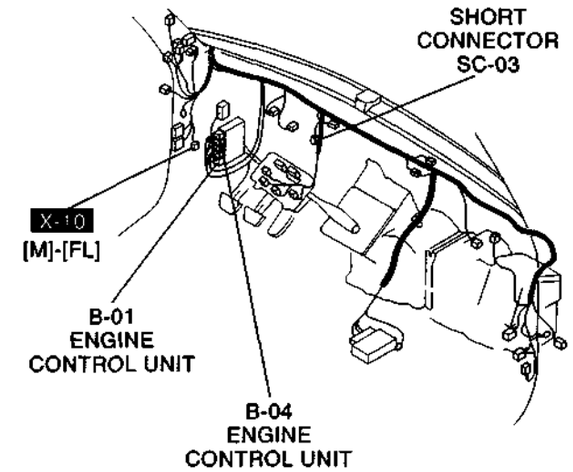
SHORT
CONNECTOR
SC-03
X-10
[M]-[FL]
B-01
ENGINE
CONTROL UNIT
B-04
ENGINE
CONTROL UNIT

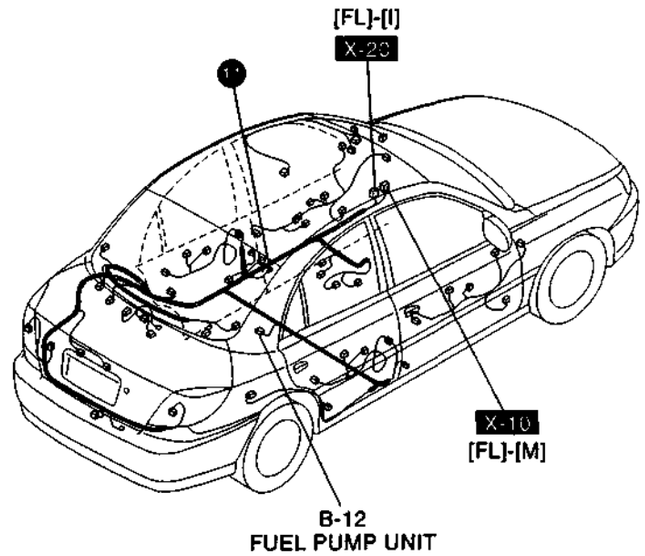
[FL]-[I]
X-23
X-10
[FL]-[M]
B-12
FUEL PUMP UNIT

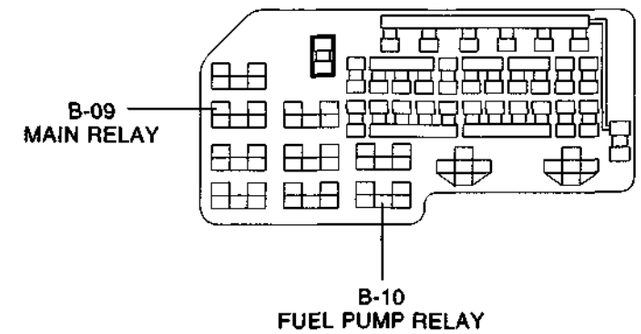
B-09
MAIN RELAY
B-10
FUEL PUMP RELAY

B-1c ENGINE CONTROL SYSTEM

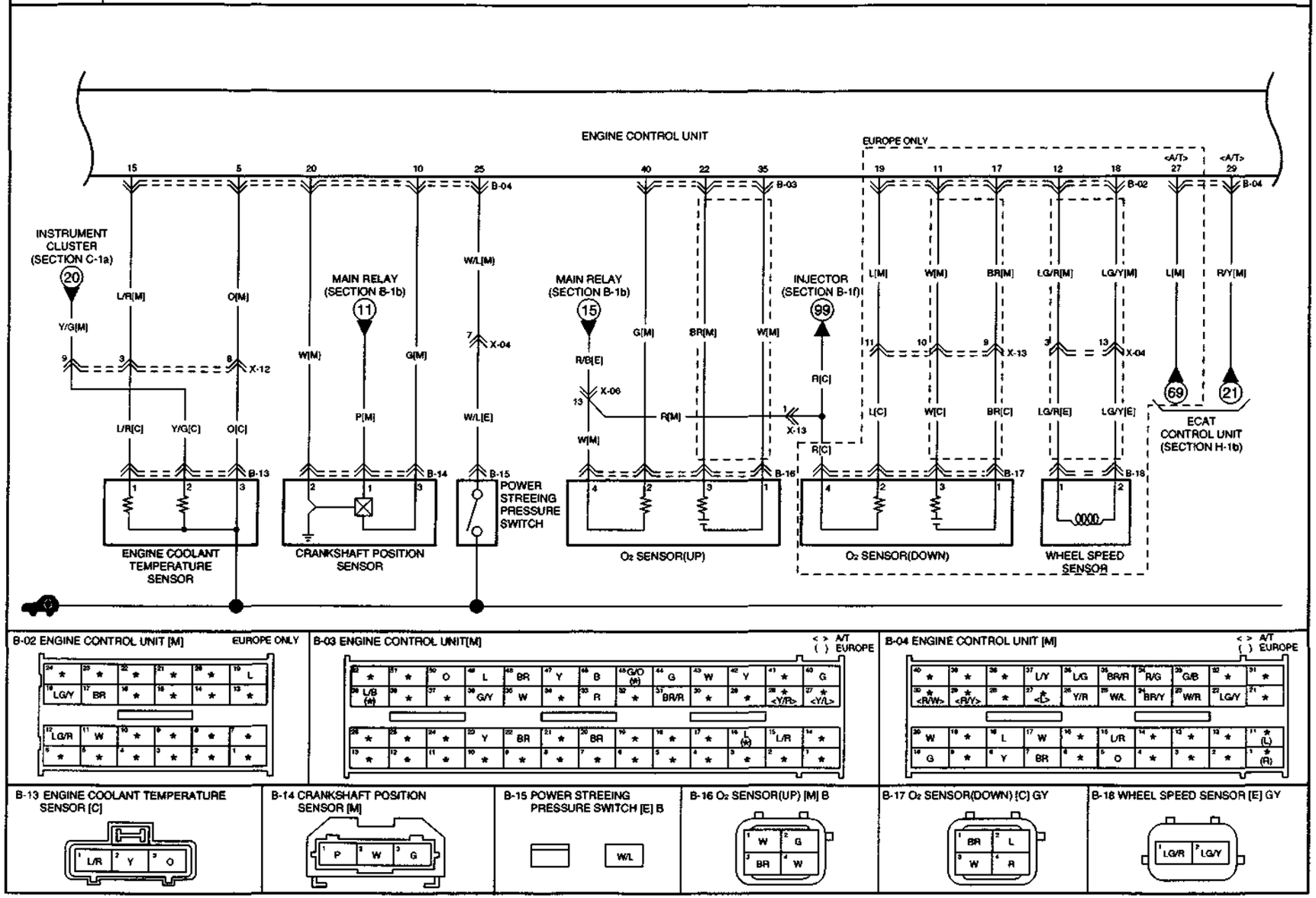

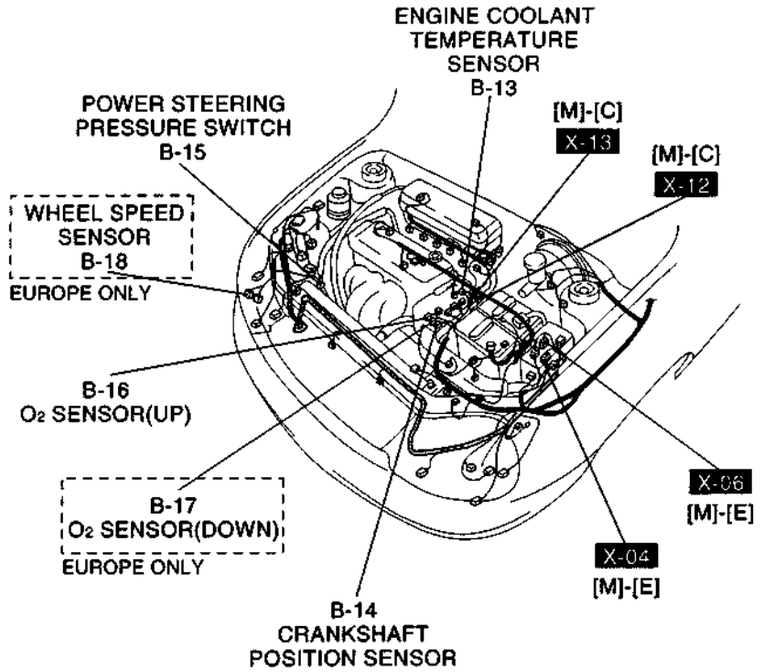
ENGINE COOLANT
TEMPERATURE
SENSOR
B-13
POWER STEERING
PRESSURE SWITCH
B-15
[M]-[C]
X-13
[M]-[C]
X-12
WHEEL SPEED
SENSOR
B-18
EUROPE ONLY
B-16
O2 SENSOR(UP)
B-17
O2 SENSOR(DOWN)
EUROPE ONLY
X-06
[M]-[E]
X-04
[M]-[E]
B-14
CRANKSHAFT
POSITION SENSOR

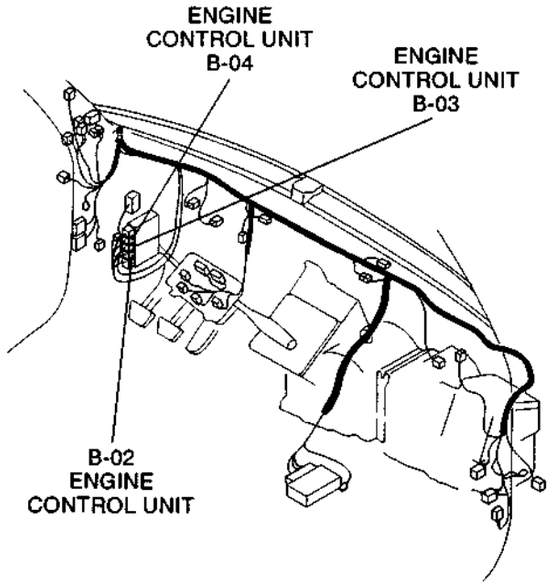
ENGINE
CONTROL UNIT
B-04
ENGINE
CONTROL UNIT
B-03
B-02
ENGINE
CONTROL UNIT

B-1d ENGINE CONTROL SYSTEM

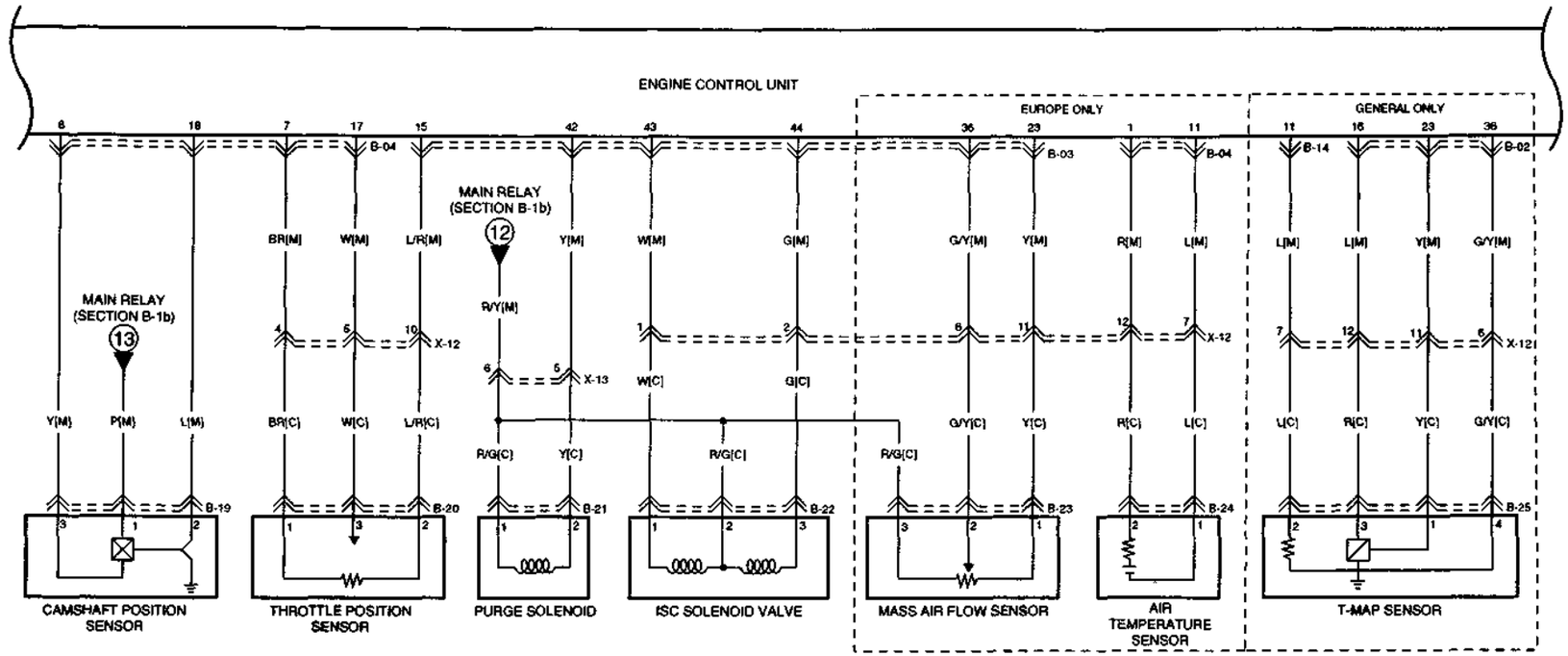

B-03 ENGINE CONTROL UNIT[M]

< > : A/T
( ) : EUROPE

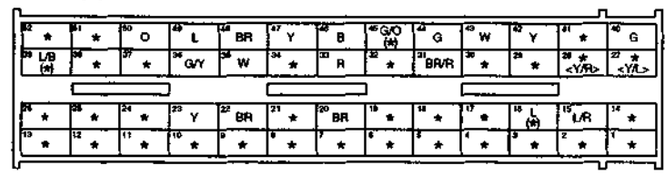

B-04 ENGINE CONTROL UNIT [M]

< > : A/T
( ) : EUROPE

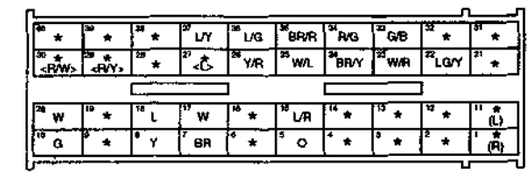

B-19 CAMSHAFT POSITION SENSOR [M]

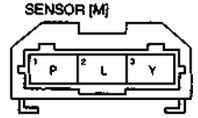

B-20 THROTTLE POSITION SENSOR [C] B

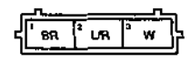

B-21 PURGE SOLENOID [C]

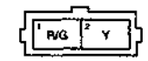

B-22 ISC SOLENOID VALVE [C] B

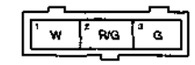

B-23 MASS AIR FLOW SENSOR [C] L

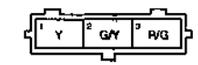

B-24 AIR TEMPERATRUE SENSOR [C] G

B-25 T-MAP SENSOR [C] B

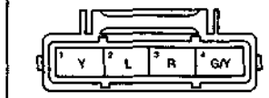

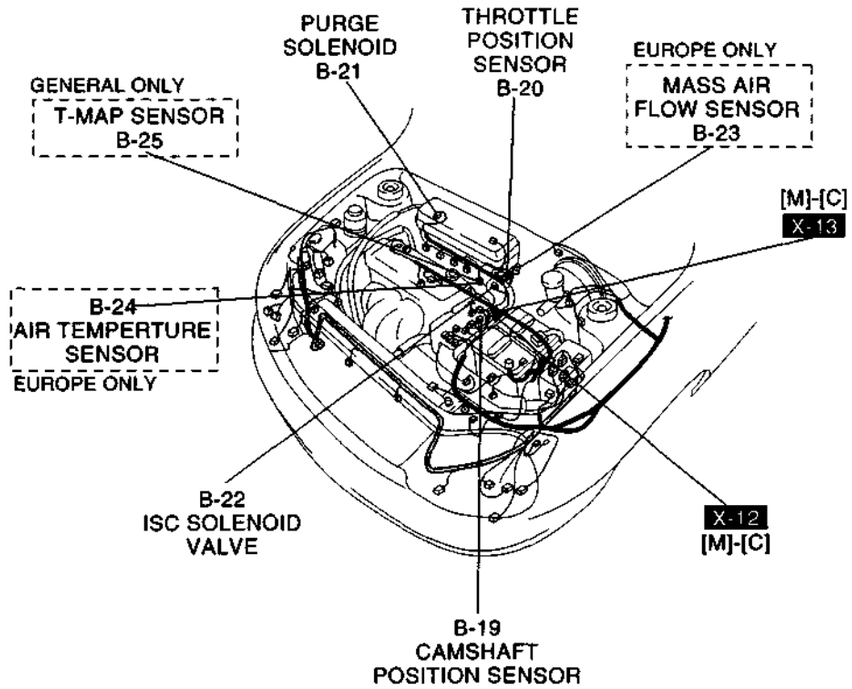
PURGE
SOLENOID
B-21
THROTTLE
POSITION
SENSOR
B-20
EUROPE ONLY
MASS AIR
FLOW SENSOR
B-23
GENERAL ONLY
T-MAP SENSOR
B-25
[M]-[C]
X-13
B-24
AIR TEMPERTURE
SENSOR
EUROPE ONLY
B-22
ISC SOLENOID
VALVE
X-12
[M]-[C]
B-19
CAMSHAFT
POSITION SENSOR

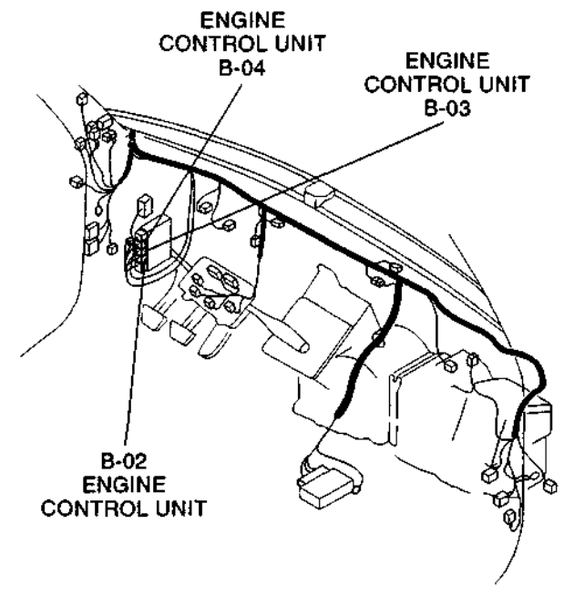
ENGINE
CONTROL UNIT
B-04
ENGINE
CONTROL UNIT
B-03
B-02
ENGINE
CONTROL UNIT

B-1e ENGINE CONTROL SYSTEM

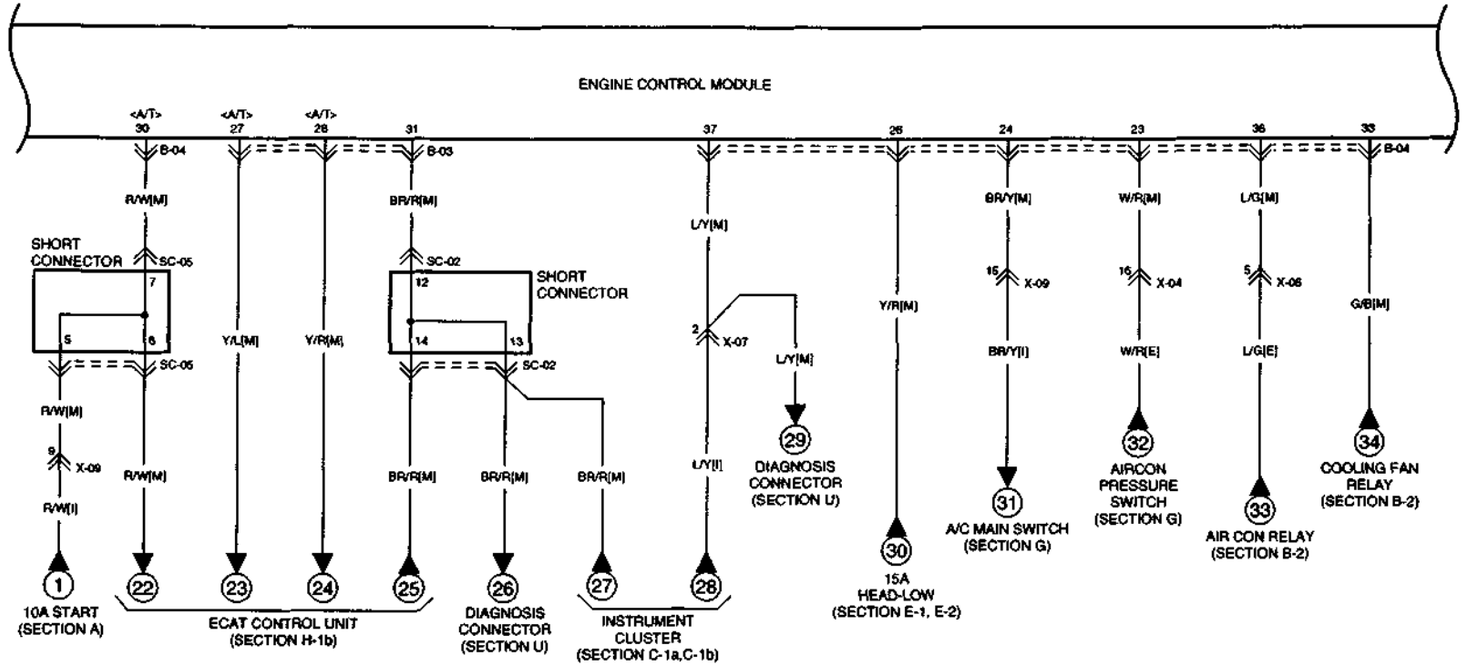

B-03 ENGINE CONTROL UNIT[M]

< > : A/T
( ) : EUROPE

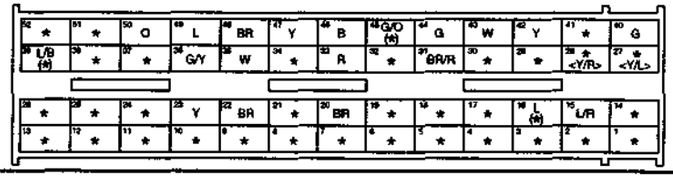

B-04 ENGINE CONTROL UNIT [M]

< > : A/T
( ) : EUROPE

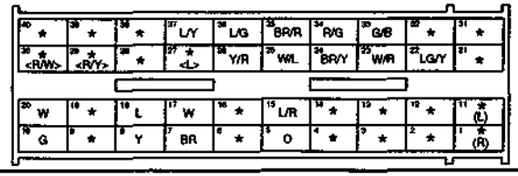

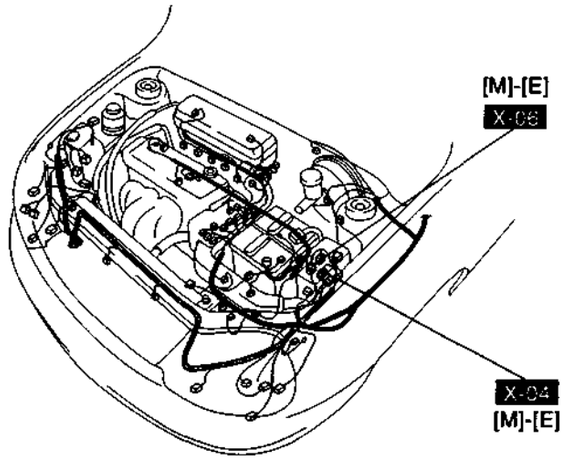
[M]-[E]
X-08
X-04
[M]-[E]

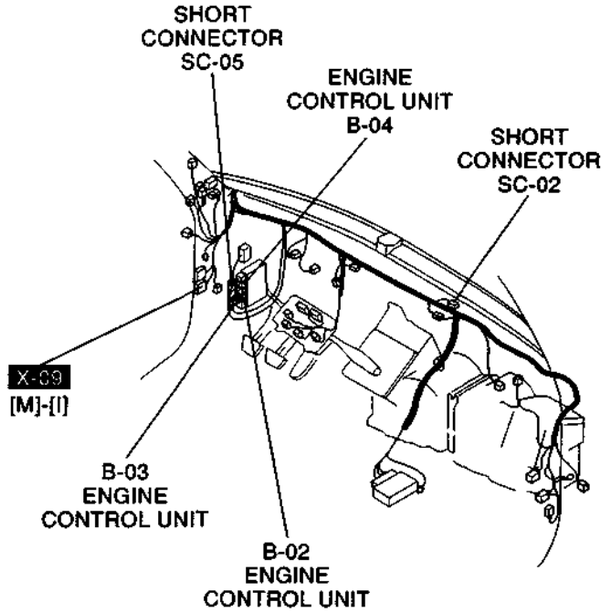
SHORT
CONNECTOR
SC-05
ENGINE
CONTROL UNIT
B-04
SHORT
CONNECTOR
SC-02
X-09
[M]-[I]
B-03
ENGINE
CONTROL UNIT
B-02
ENGINE
CONTROL UNIT

B-1f ENGINE CONTROL SYSTEM

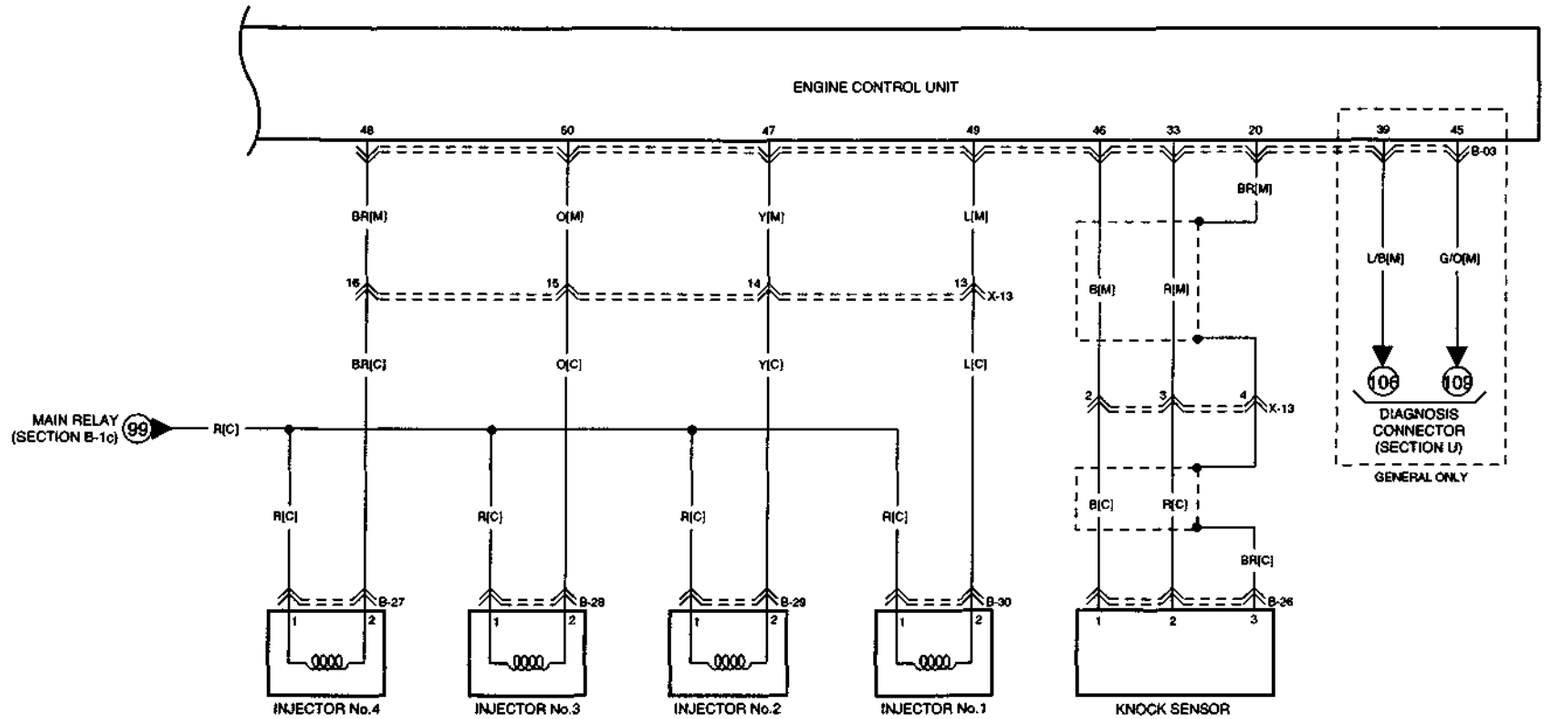

B-03 ENGINE CONTROL UNIT[M]

< > : A/T
( ) : EUROPE

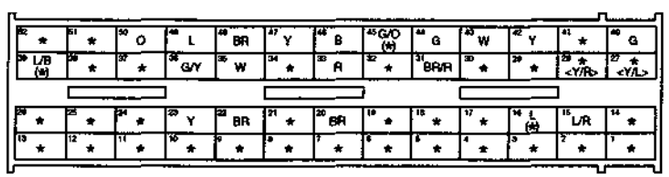

B-27 INJECTOR No.4 [C]

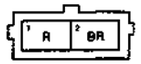

B-28 INJECTOR No.3 [C]

B-29 INJECTOR No.2 [C]

B-30 INJECTOR No.1 [C]

B-26 KNOCK SENSOR [C]

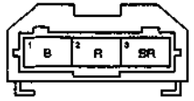

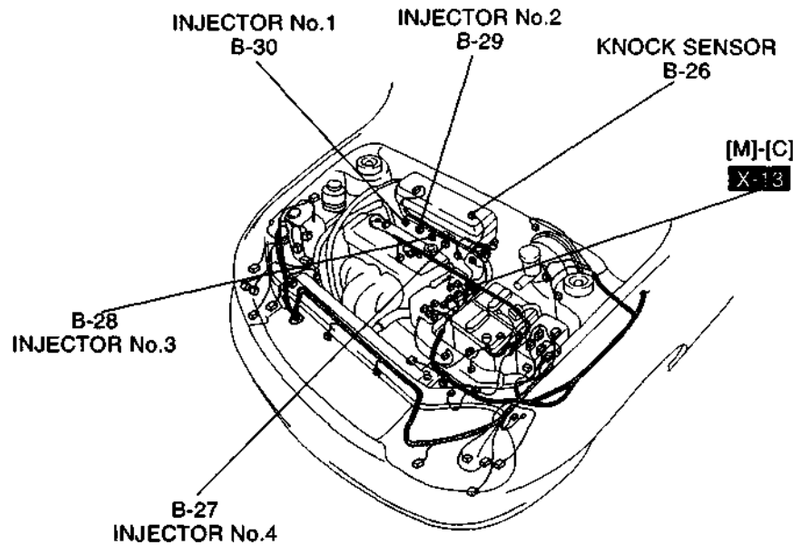
INJECTOR No.1
B-30
INJECTOR No.2
B-29
KNOCK SENSOR
B-26
[M]-[C]
X-13
B-28
INJECTOR No.3
B-27
INJECTOR No.4

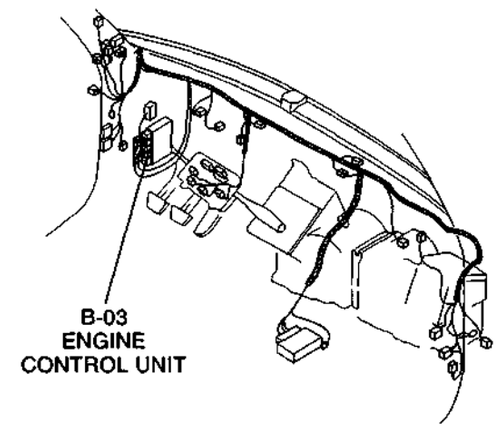
B-03
ENGINE
CONTROL UNIT

B-2 COOLING SYSTEM

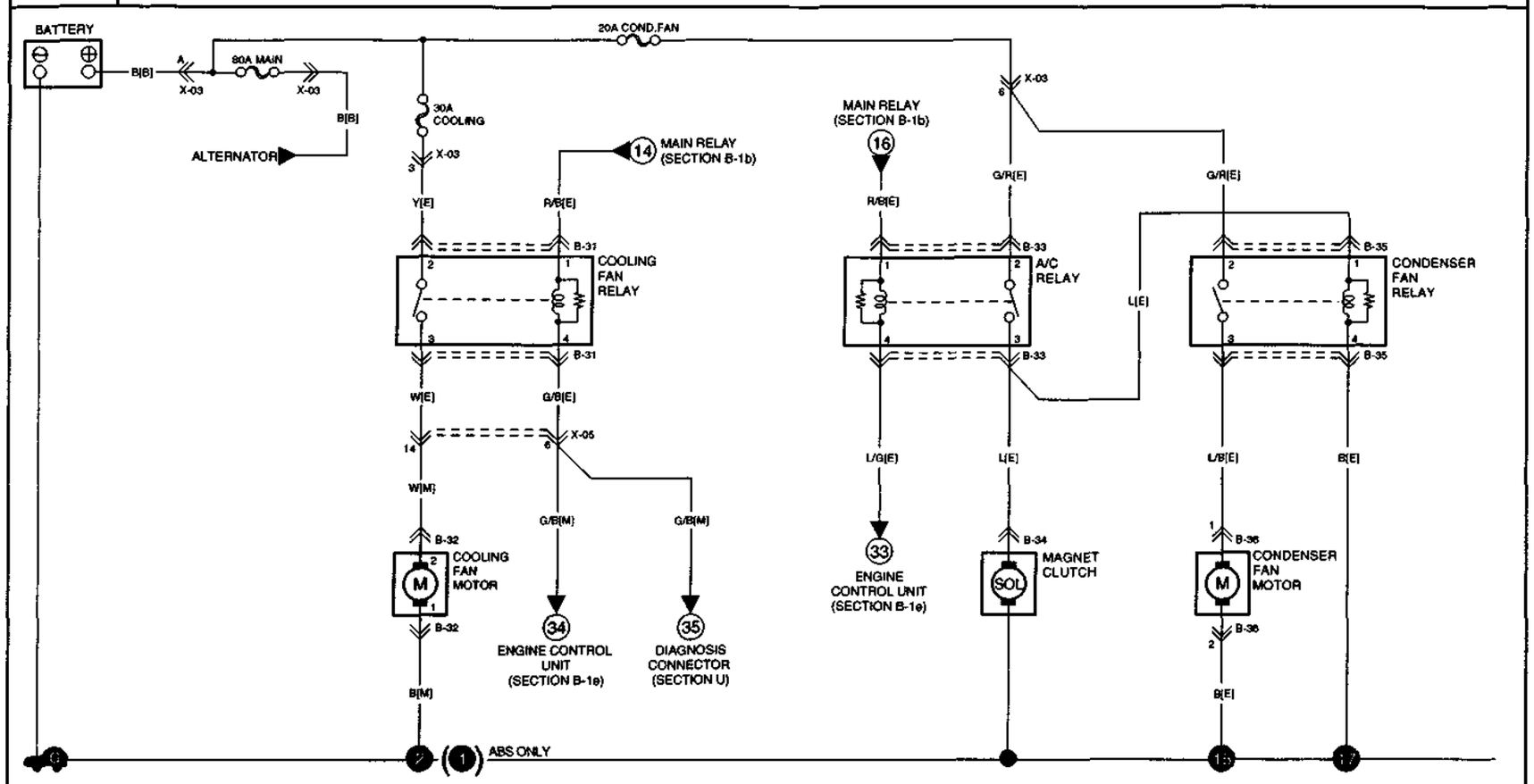

B-31 COOLING FAN RELAY [E]	B-32 COOLING FAN MOTOR [M] B	B-33 A/C RELAY [E]	B-34 MAGNET CLUTCH [E] B	B-35 CONDENSER FAN RELAY [E]	B-36 CONDENSER FAN MOTOR [E]
1 R/B, 2 Y, 3 W, 4 G/B	1 B, 2 W	1 R/B, 2 G/R, 3 L L, 4 L/G	1 L	1 L, 2 G/R, 3 L/B, 4 B	1 L/B, 2 B

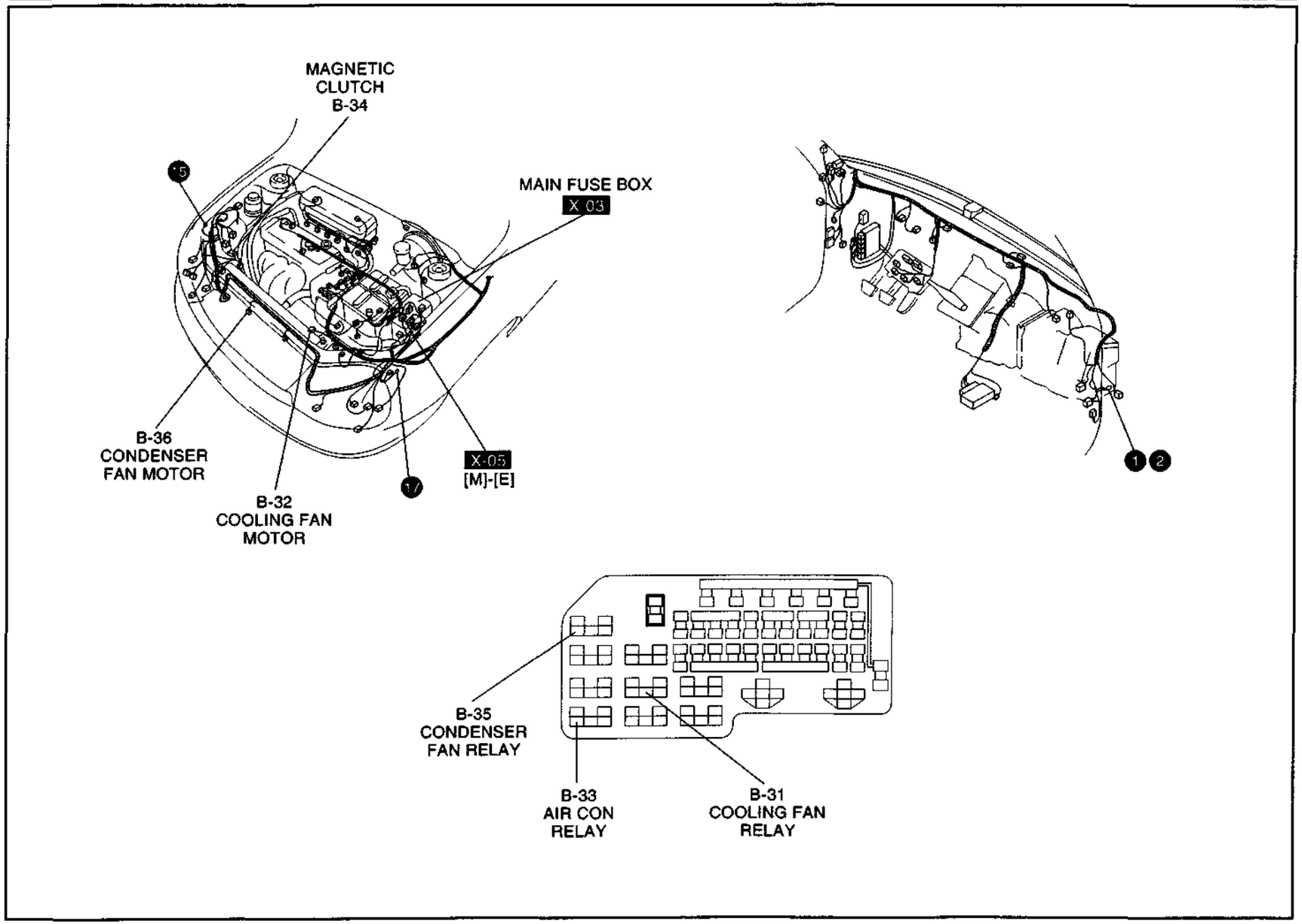
MAGNETIC
CLUTCH
B-34
MAIN FUSE BOX
X 03
B-36
CONDENSER
FAN MOTOR
B-32
COOLING FAN
MOTOR
X-05
[M]-[E]
B-35
CONDENSER
FAN RELAY
B-33
AIR CON
RELAY
B-31
COOLING FAN
RELAY

C-1a INSTRUMENT CLUSTER & WARNING LAMPS

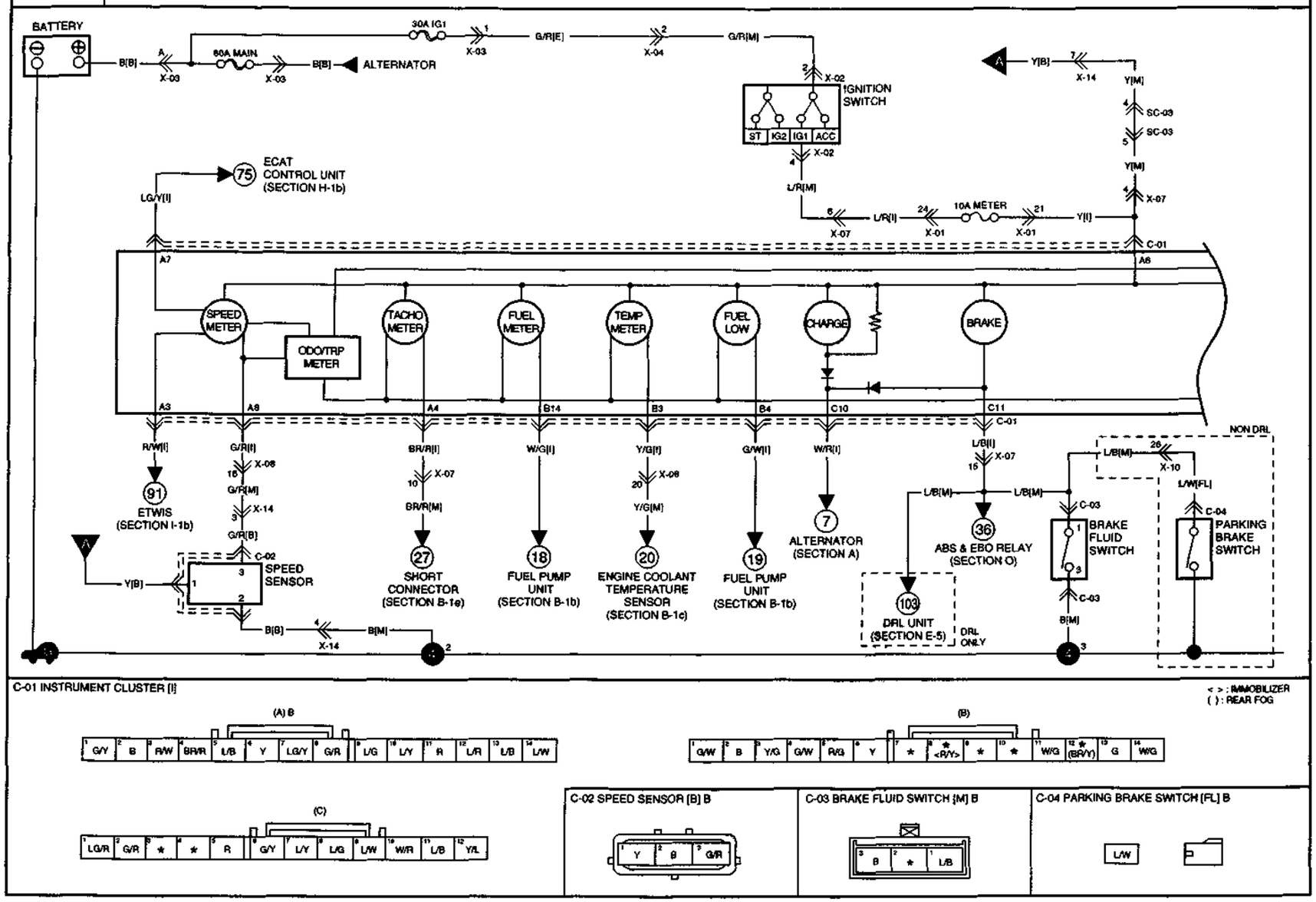

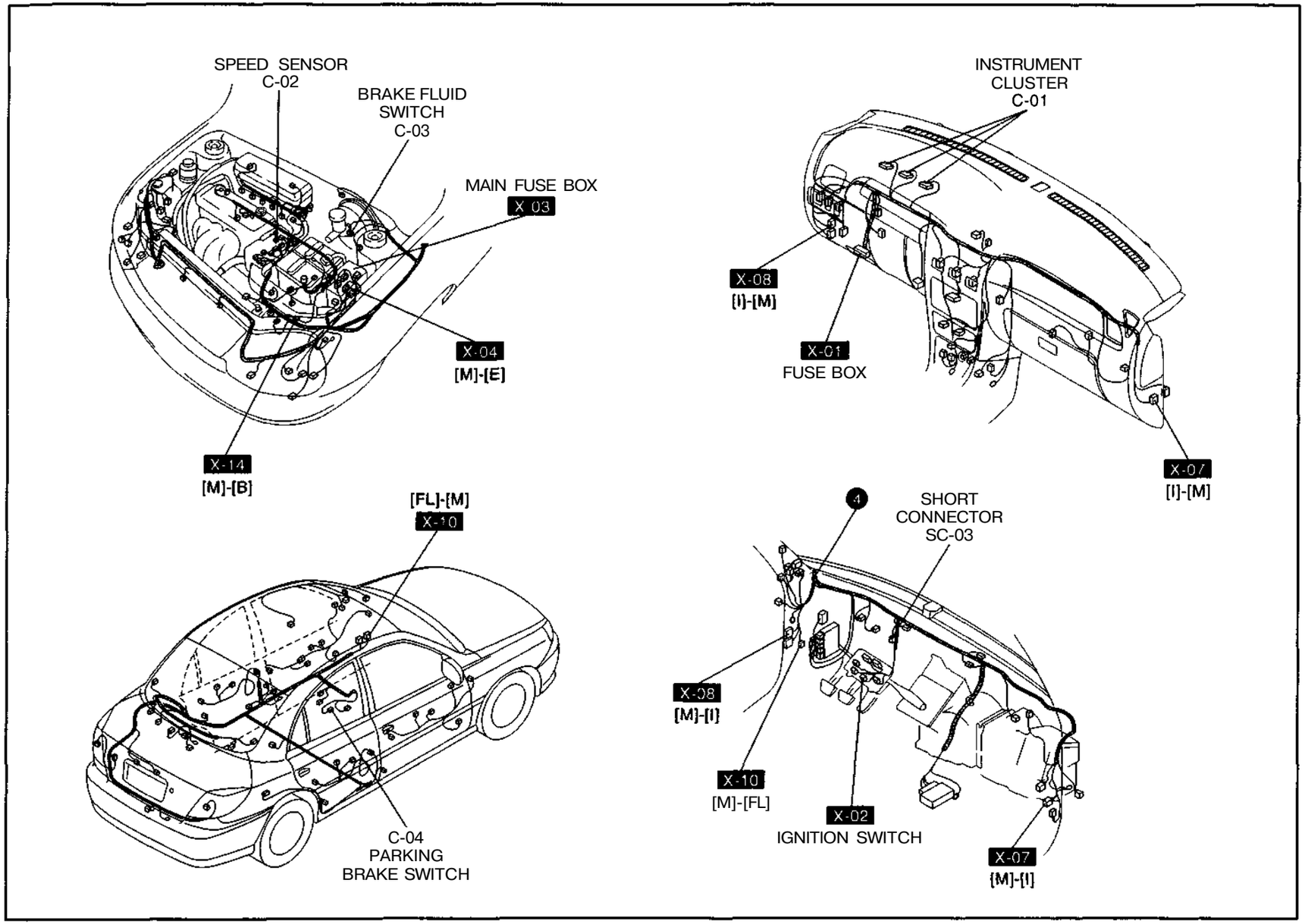
SPEED SENSOR
C-02
BRAKE FLUID
SWITCH
C-03
MAIN FUSE BOX
X 03
X-04
[M]-[E]
X-14
[M]-[B]
INSTRUMENT
CLUSTER
C-01
X-08
[I]-[M]
X-01
FUSE BOX
X-07
[I]-[M]
[FL]-[M]
X-10
C-04
PARKING
BRAKE SWITCH
4
SHORT
CONNECTOR
SC-03
X-08
[M]-[I]
X-10
[M]-[FL]
X-02
IGNITION SWITCH
X-07
[M]-[I]

C-1b INSTRUMENT CLUSTER & WARNING LAMPS

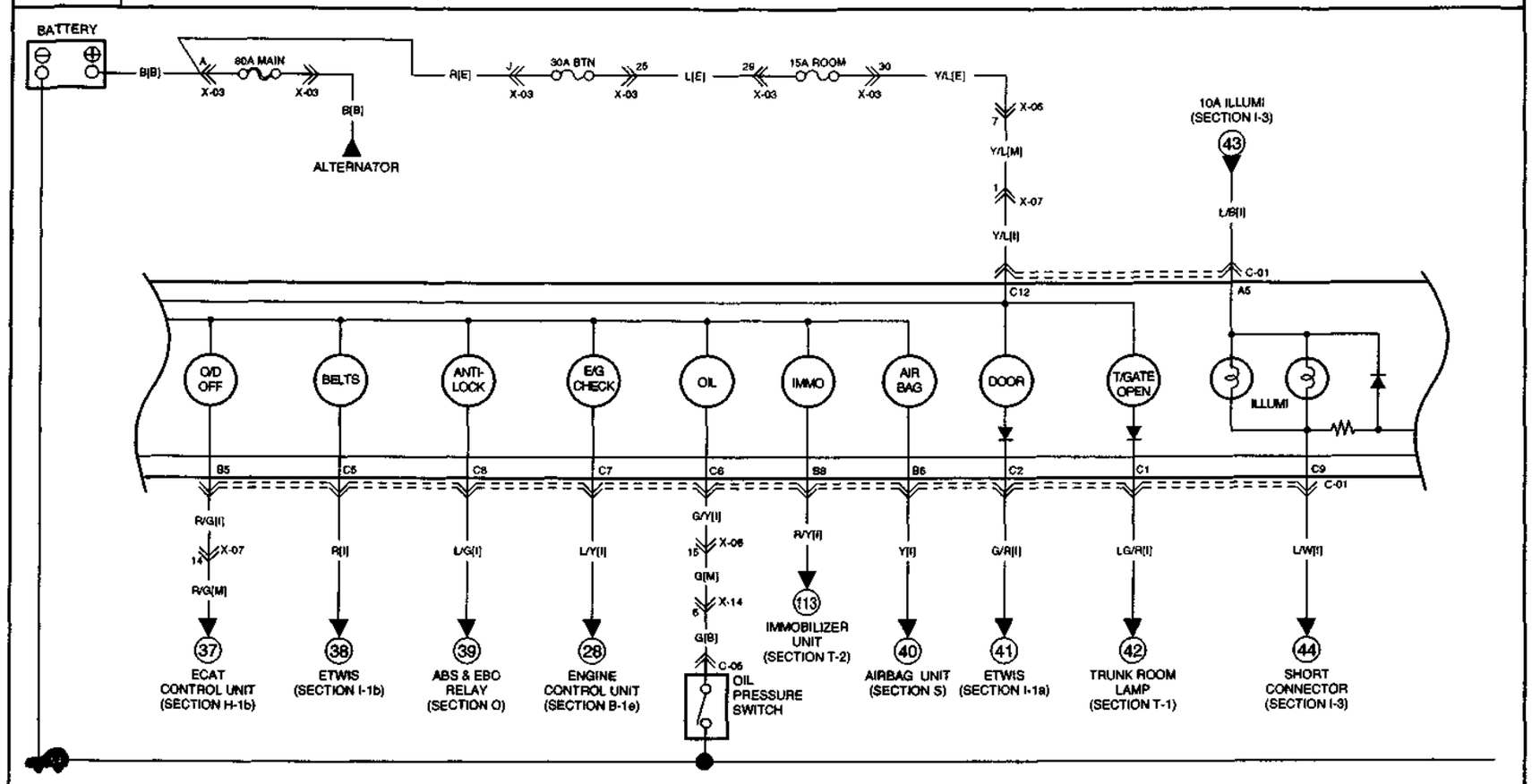

C-01 INSTRUMENT CLUSTER [I]

< > : IMMOBILIZER
( ) : REAR FOG

(A) B

1	2	3	4	5	6	7	8	9	10	11	12	13	14
G/Y	B	R/W	BR/R	L/B	Y	LG/Y	G/R	L/G	L/Y	R	L/R	L/B	L/W

(B)

1	2	3	4	5	6	7	8	9	10	11	12	13	14
G/W	B	Y/G	G/W	R/G	Y	*	* <R/Y>	*	*	W/G	* (BR/Y)	G	W/G

(C)

1	2	3	4	5	6	7	8	9	10	11	12
LG/R	G/R	*	*	R	G/Y	L/Y	L/G	L/W	W/R	L/B	Y/L

C-05 OIL PRESSURE SWITCH [B] B

C G

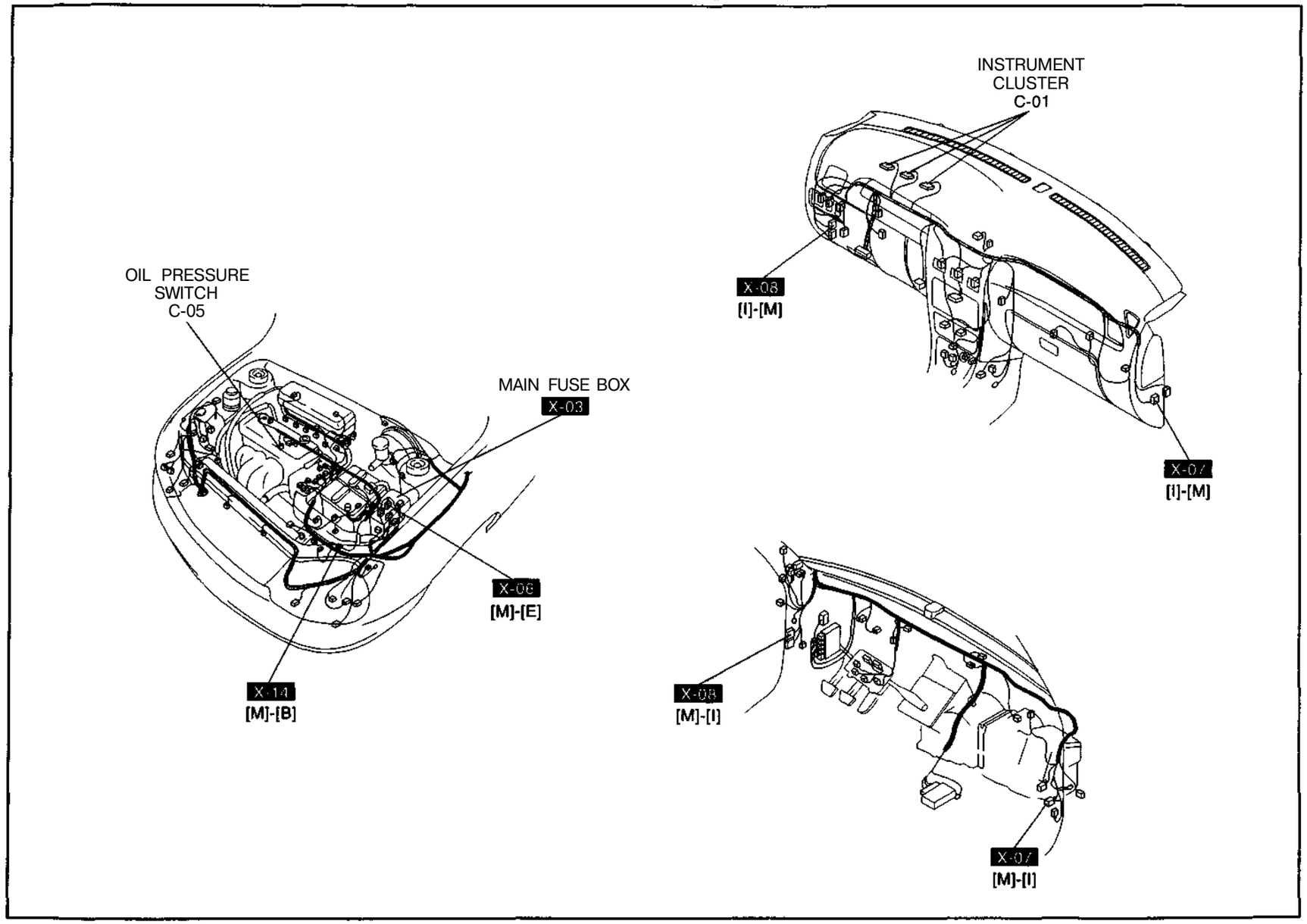
INSTRUMENT
CLUSTER
C-01
X-08
[I]-[M]
X-07
[I]-[M]
OIL PRESSURE
SWITCH
C-05
MAIN FUSE BOX
X-03
X-06
[M]-[E]
X-14
[M]-[B]
X-08
[M]-[I]
X-07
[M]-[I]

C-1c INSTRUMENT CLUSTER & WARNING LAMPS

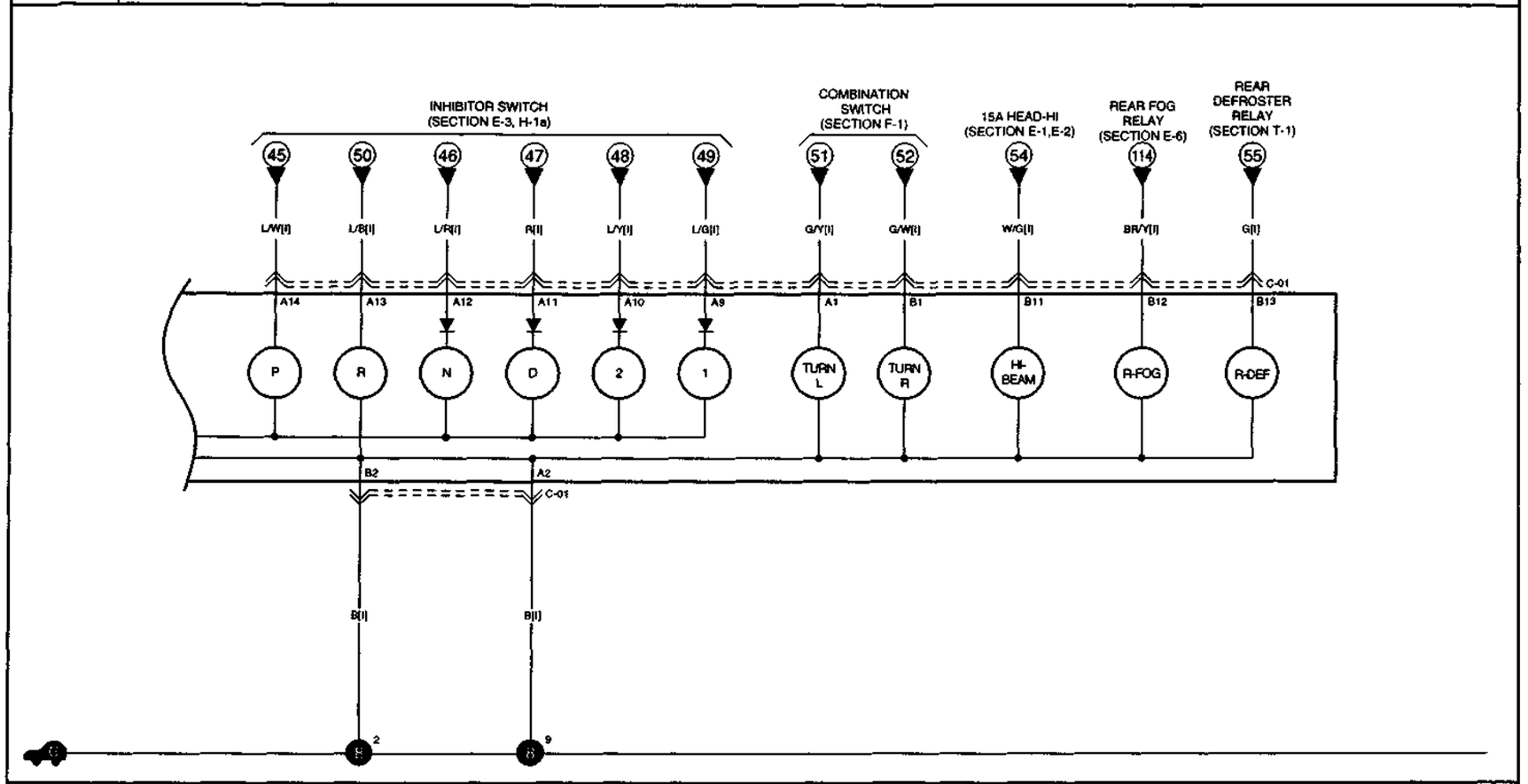

C-01 INSTRUMENT CLUSTER [I]

< > : IMMOBILIZER
( ) : REAR FOG

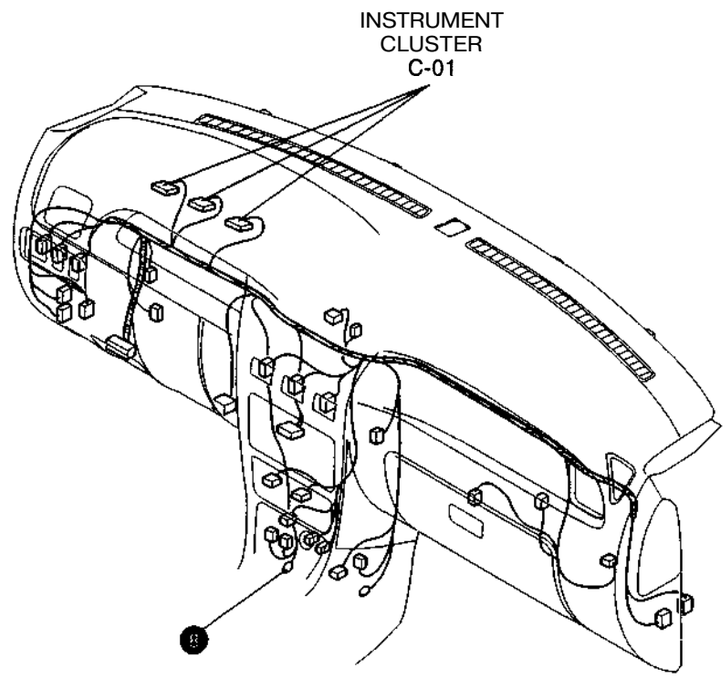
INSTRUMENT
CLUSTER
C-01

D WIPER & WASHER SYSTEM (FRONT, REAR)

( ) : AIRBAG ONLY

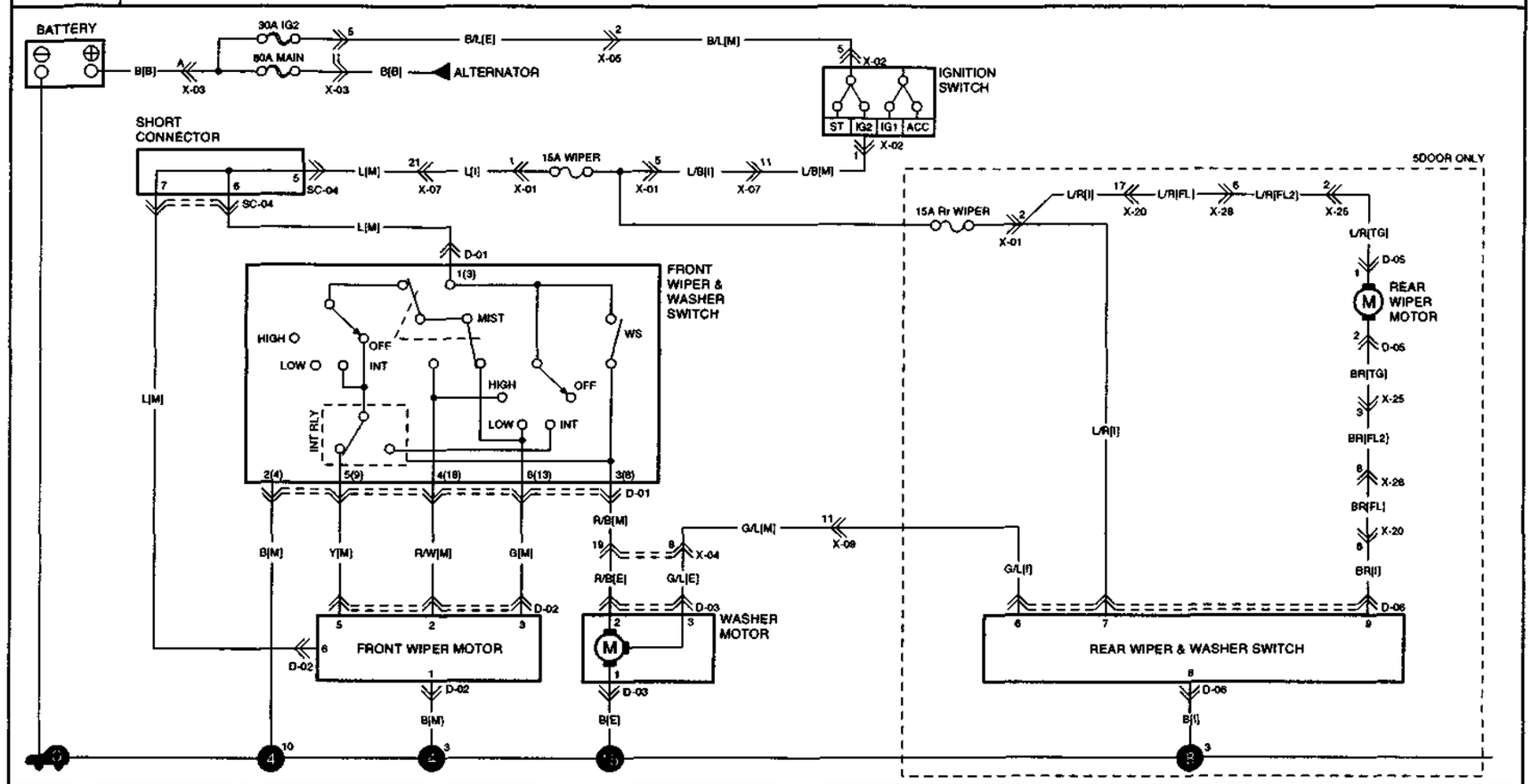

D-01 FRONT WIPER & WASHER SWITCH [M]

( ) : REAR FOG

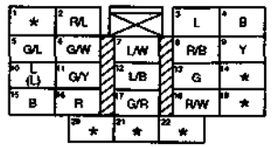

AIRBAG ONLY

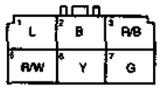

NON AIRBAG

D-02 FRONT WIPER MOTOR [M] B

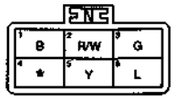

D-03 WASHER MOTOR [E]

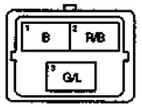

D-05 REAR WIPER MOTOR [TG]

D-06 REAR WIPER & WASHER SWITCH [I]

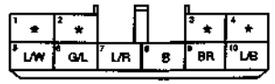

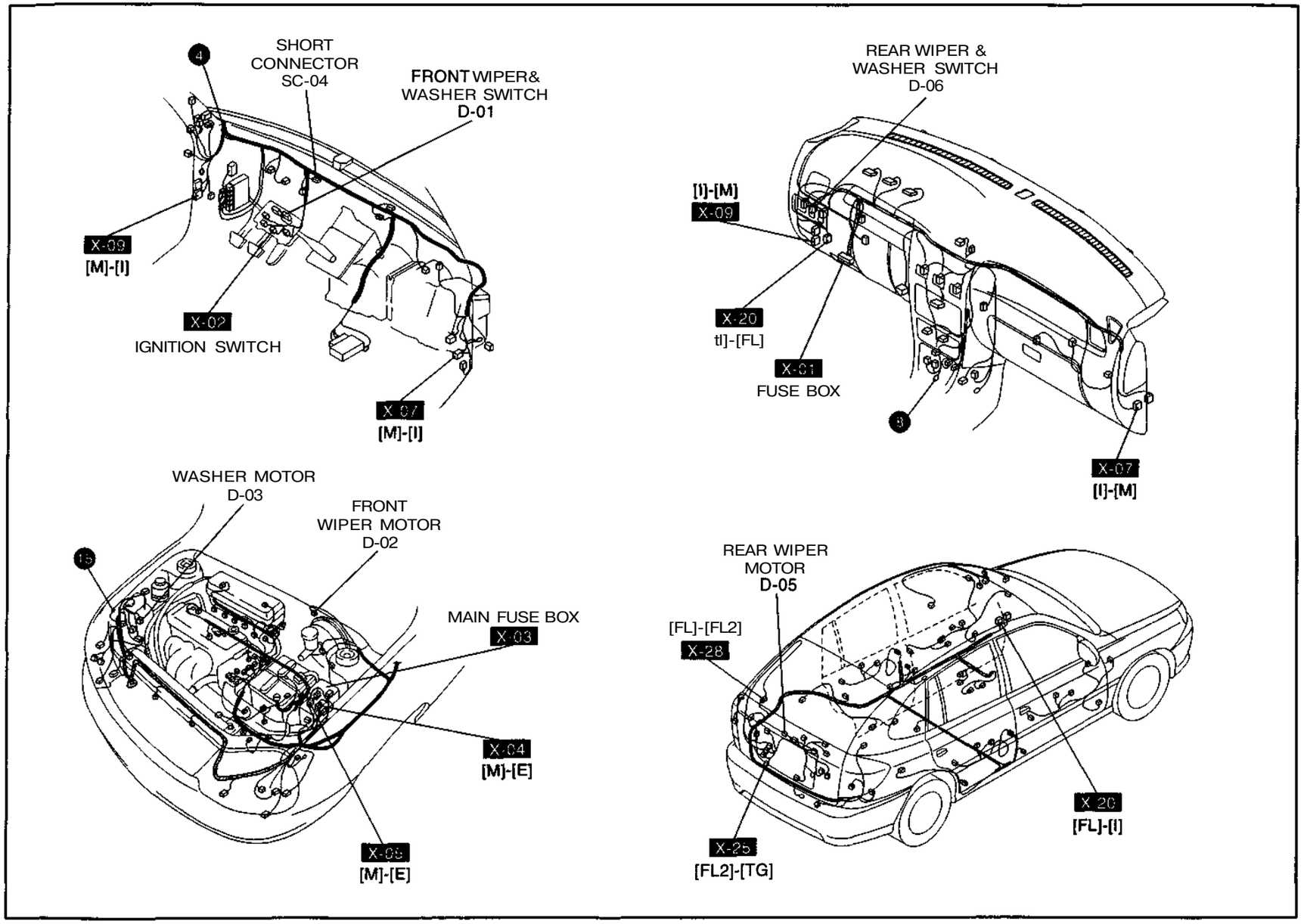
SHORT
CONNECTOR
SC-04
FRONT WIPER&
WASHER SWITCH
D-01
X-09
[M]-[I]
X-02
IGNITION SWITCH
X-07
[M]-[I]
REAR WIPER &
WASHER SWITCH
D-06
[I]-[M]
X-09
X-20
tI]-[FL]
X-01
FUSE BOX
X-07
[I]-[M]
WASHER MOTOR
D-03
FRONT
WIPER MOTOR
D-02
MAIN FUSE BOX
X-03
X-04
[M]-[E]
X-05
[M]-[E]
REAR WIPER
MOTOR
D-05
[FL]-[FL2]
X-28
X-20
[FL]-[I]
X-25
[FL2]-[TG]

E-1 HEADLIGHTS(WITH AIRBAG)

( ) : HLLD ONLY

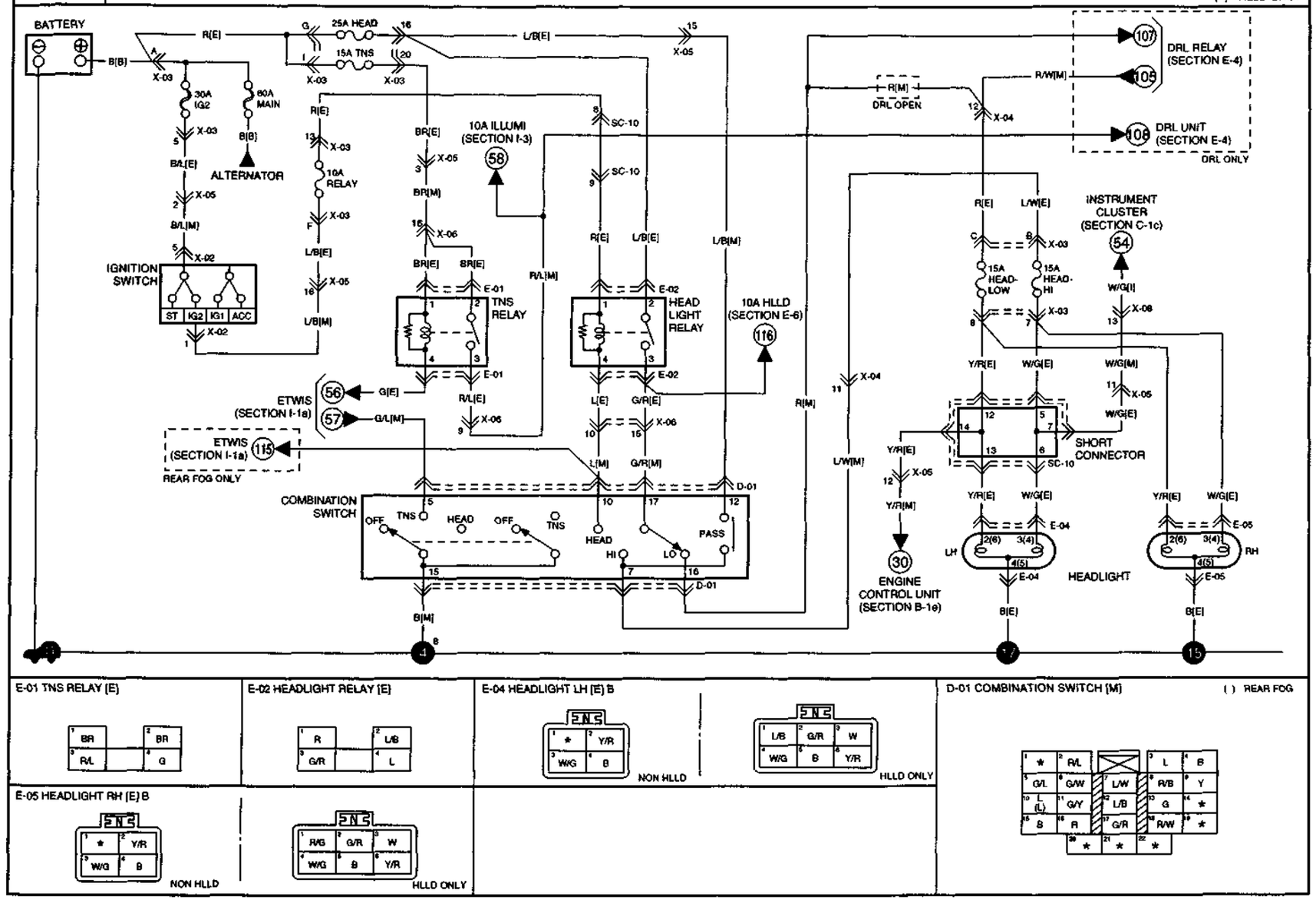

E-01 TNS RELAY (E)

E-02 HEADLIGHT RELAY (E)

E-04 HEADLIGHT LH (E) B

NON HLLD

HLLD ONLY

D-01 COMBINATION SWITCH (M)

( ) REAR FOG

E-05 HEADLIGHT RH (E) B

NON HLLD

HLLD ONLY

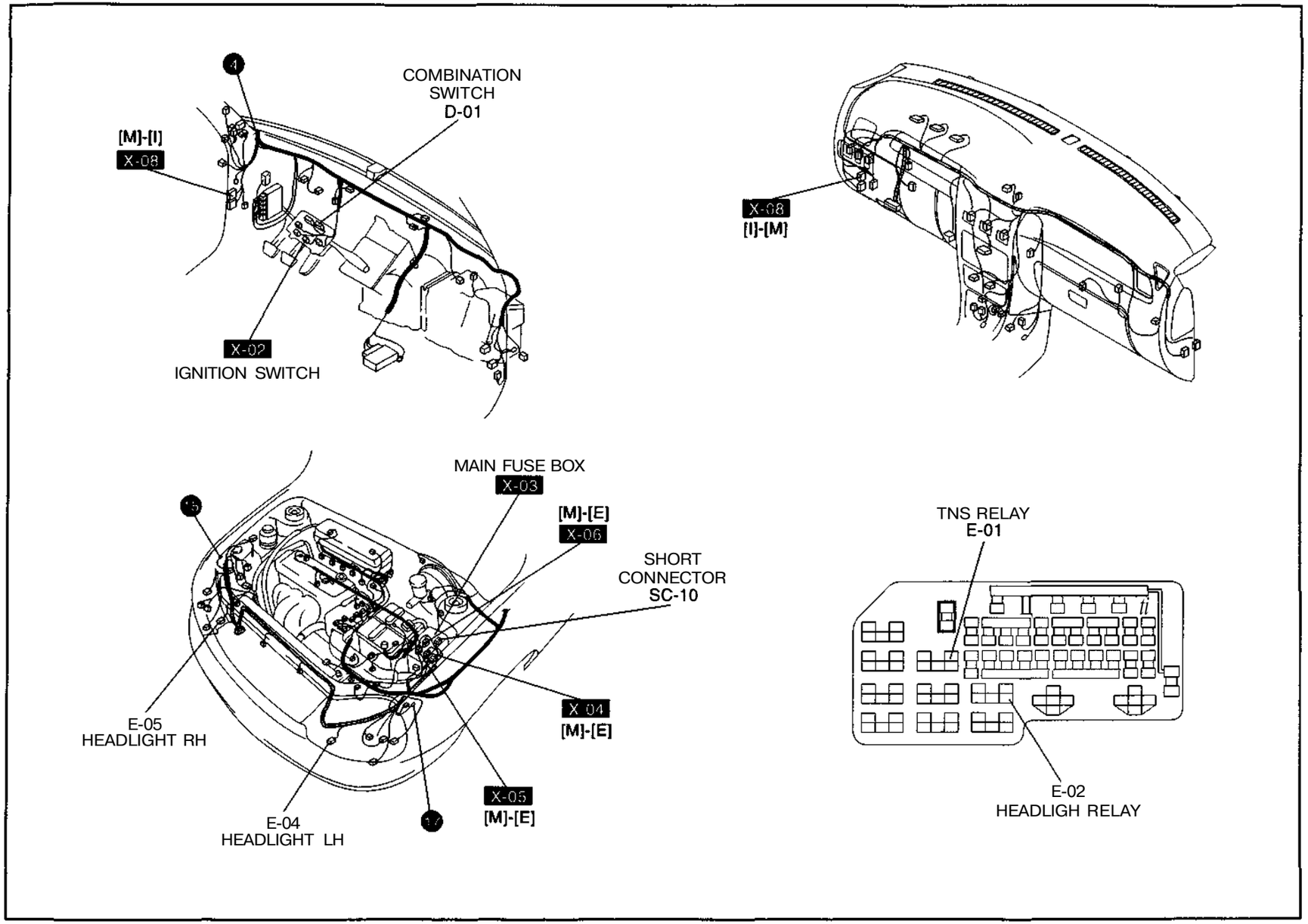
4
COMBINATION
SWITCH
D-01
[M]-[I]
X-08
X-02
IGNITION SWITCH
X-08
[I]-[M]
MAIN FUSE BOX
X-03
[M]-[E]
X-06
SHORT
CONNECTOR
SC-10
TNS RELAY
E-01
E-05
HEADLIGHT RH
X 04
[M]-[E]
X-05
[M]-[E]
E-04
HEADLIGHT LH
E-02
HEADLIGH RELAY

E-2 HEADLIGHTS (WITHOUT AIRBAG)

( ) HLLD ONLY

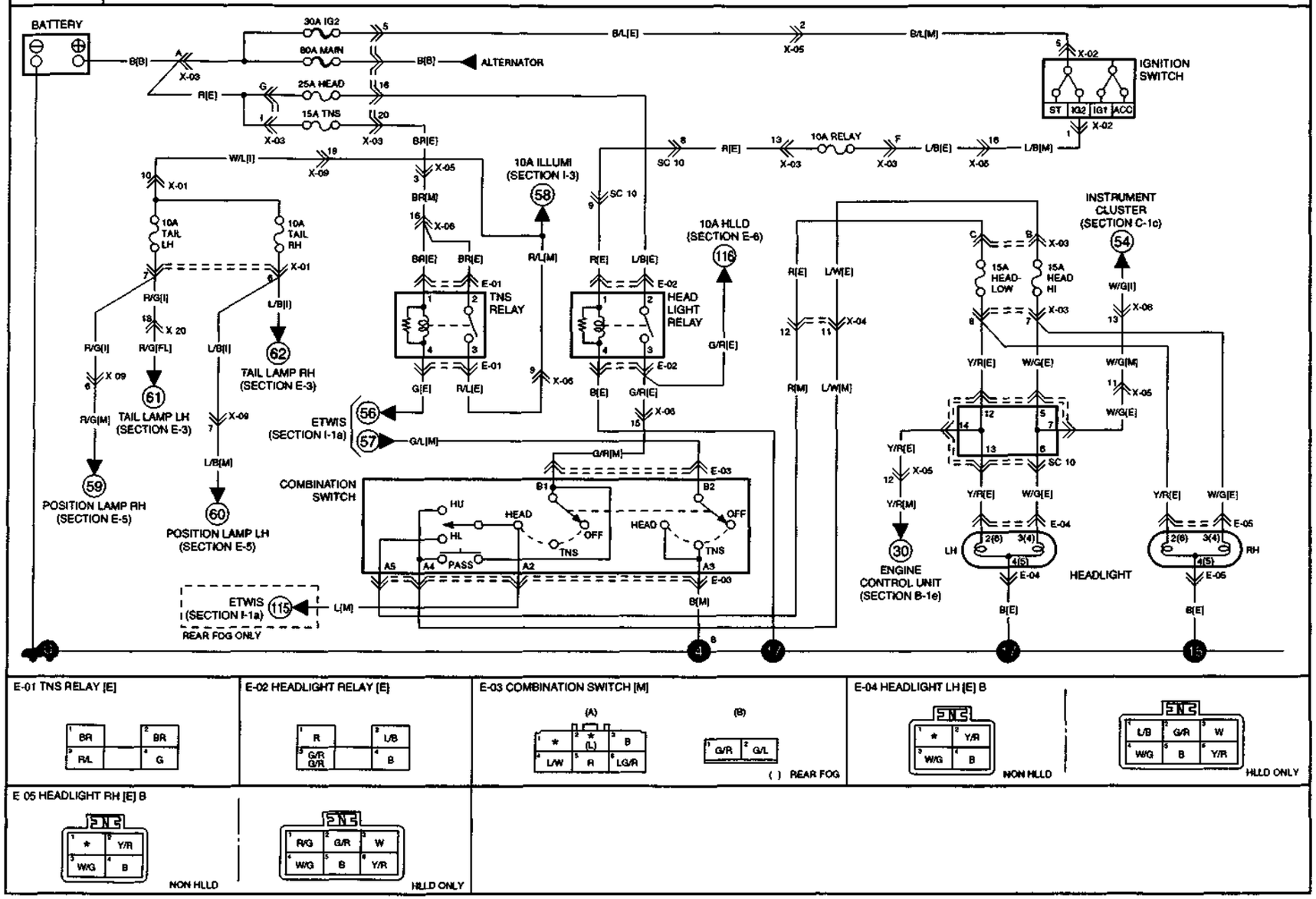

E-01 TNS RELAY [E]	E-02 HEADLIGHT RELAY [E]	E-03 COMBINATION SWITCH [M]	E-04 HEADLIGHT LH [E] B
		( ) REAR FOG	NON HLLD HLLD ONLY

E 05 HEADLIGHT RH [E] B	
NON HLLD	HLLD ONLY

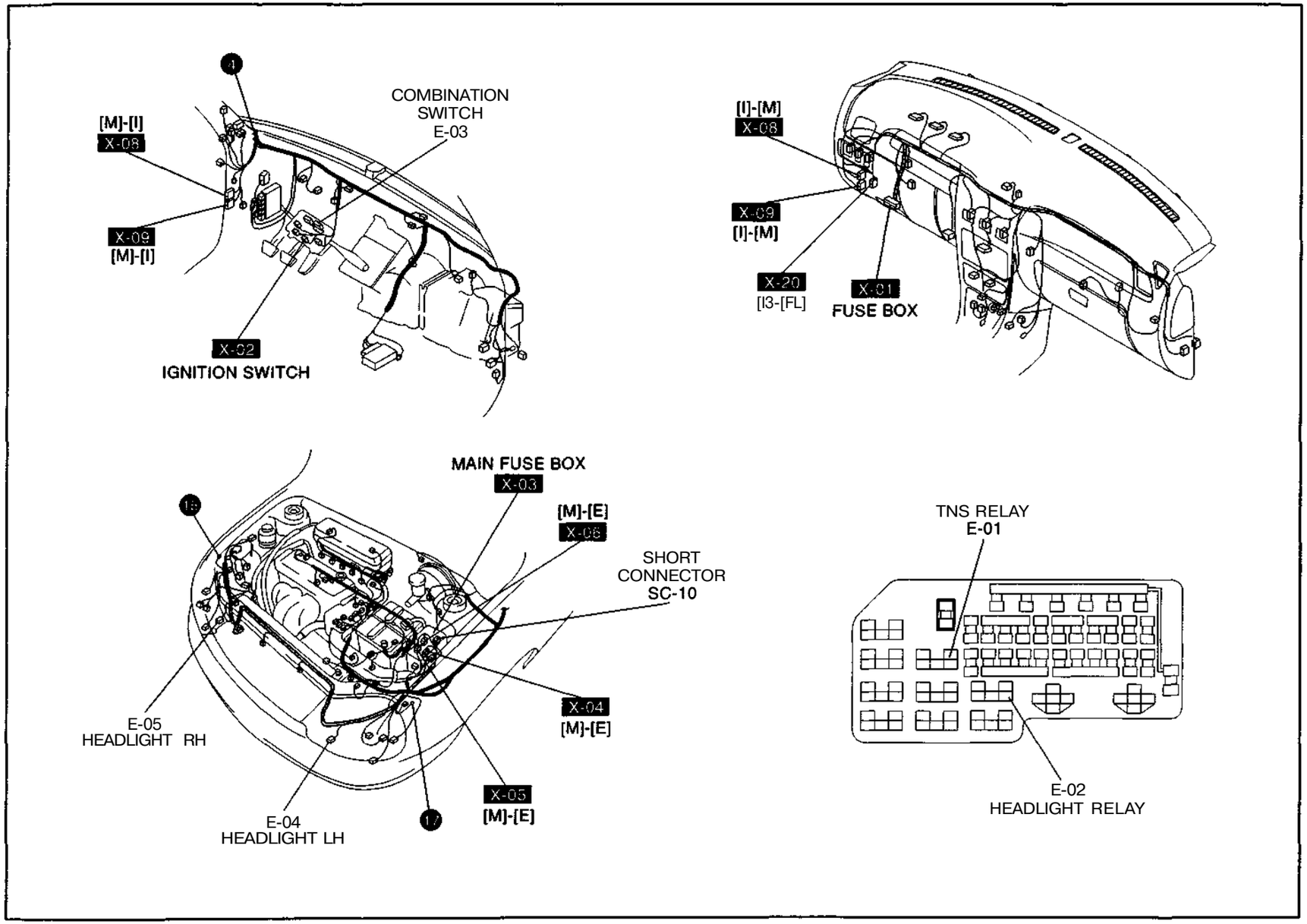
COMBINATION
SWITCH
E-03
[M]-[I]
X-08
X-09
[M]-[I]
X-02
IGNITION SWITCH
[I]-[M]
X-08
X-09
[I]-[M]
X-20
[I3-[FL]
X-01
FUSE BOX
MAIN FUSE BOX
X-03
[M]-[E]
X-06
SHORT
CONNECTOR
SC-10
X-04
[M]-[E]
X-05
[M]-[E]
E-05
HEADLIGHT RH
E-04
HEADLIGHT LH
TNS RELAY
E-01
E-02
HEADLIGHT RELAY

E-3 BACK-UP LIGHTS, LICENSE LIGHTS, TAIL LIGHTS

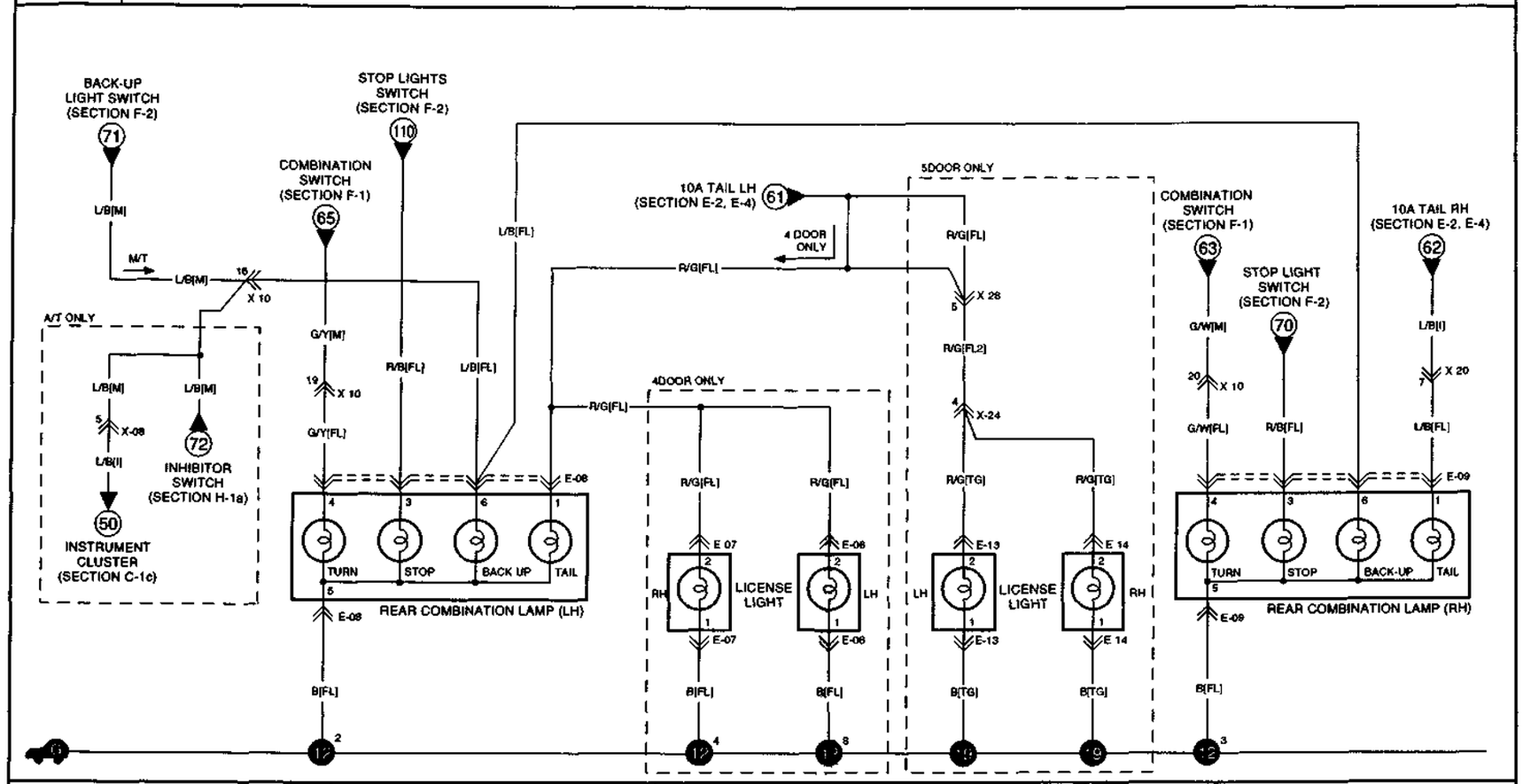

E-06 LICENSE LIGHT LH [FL]	E-07 LICENSE LIGHT RH [FL]	E-08 REAR COMBINATION LAMP LH [FL]	E-09 REAR COMBINATION LAMP RH [FL]
1 B, 2 R/G — 4 DOOR ONLY	1 B, 2 R/G — 4 DOOR ONLY	1 R/G; 2 * (BR/Y) (BR/Y); 3 R/B; 4 L/B L/B; 5 B; 6 G/Y — ( ) REAR FOG	1 L/B; 2 * (BR/Y); 3 R/B; 4 G/W; 5 B; 6 L/B — ( ) REAR FOG
E-13 LICENSE LIGHT LH [TG]	**E-14 LICENSE LIGHT RH [TG]**		
1 B, 2 R/G — 5 DOOR ONLY	1 B, 2 R/G — 5 DOOR ONLY		

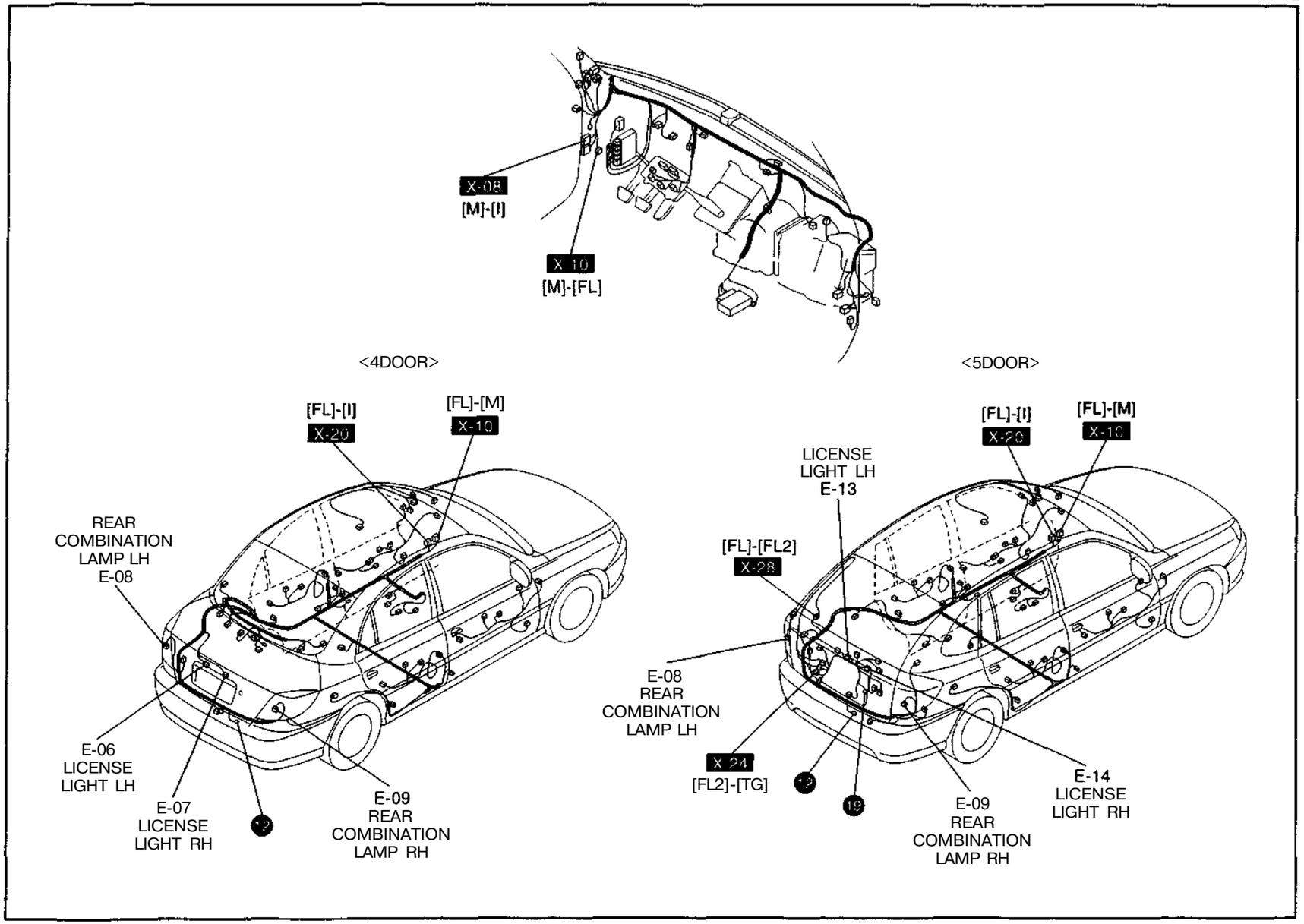
X-08
[M]-[I]
X-10
[M]-[FL]
<4DOOR>
[FL]-[I]
X-20
[FL]-[M]
X-10
REAR COMBINATION LAMP LH E-08
E-06 LICENSE LIGHT LH
E-07 LICENSE LIGHT RH
E-09 REAR COMBINATION LAMP RH
<5DOOR>
[FL]-[I]
X-20
[FL]-[M]
X-10
LICENSE LIGHT LH E-13
[FL]-[FL2]
X-28
E-08 REAR COMBINATION LAMP LH
X-24
[FL2]-[TG]
E-09 REAR COMBINATION LAMP RH
E-14 LICENSE LIGHT RH

E-4 DAYTIME RUNNING LIGHT(DRL)

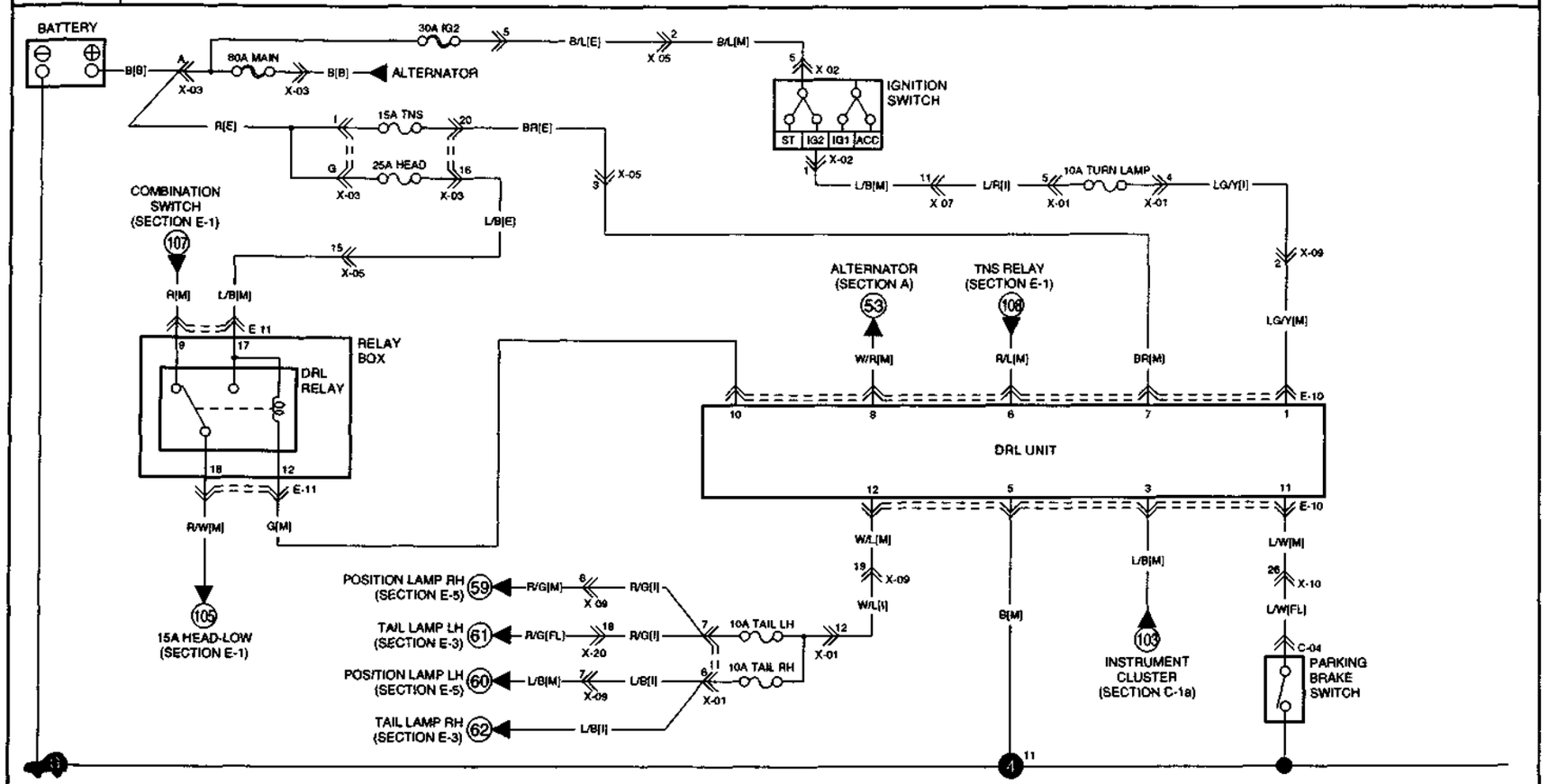

E-10 DRL UNIT [M]

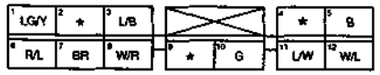

E-11 RELAY BOX (DRL RELAY) [M]

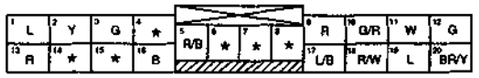

C-04 PARKING BRAKE SWITCH [FL] B

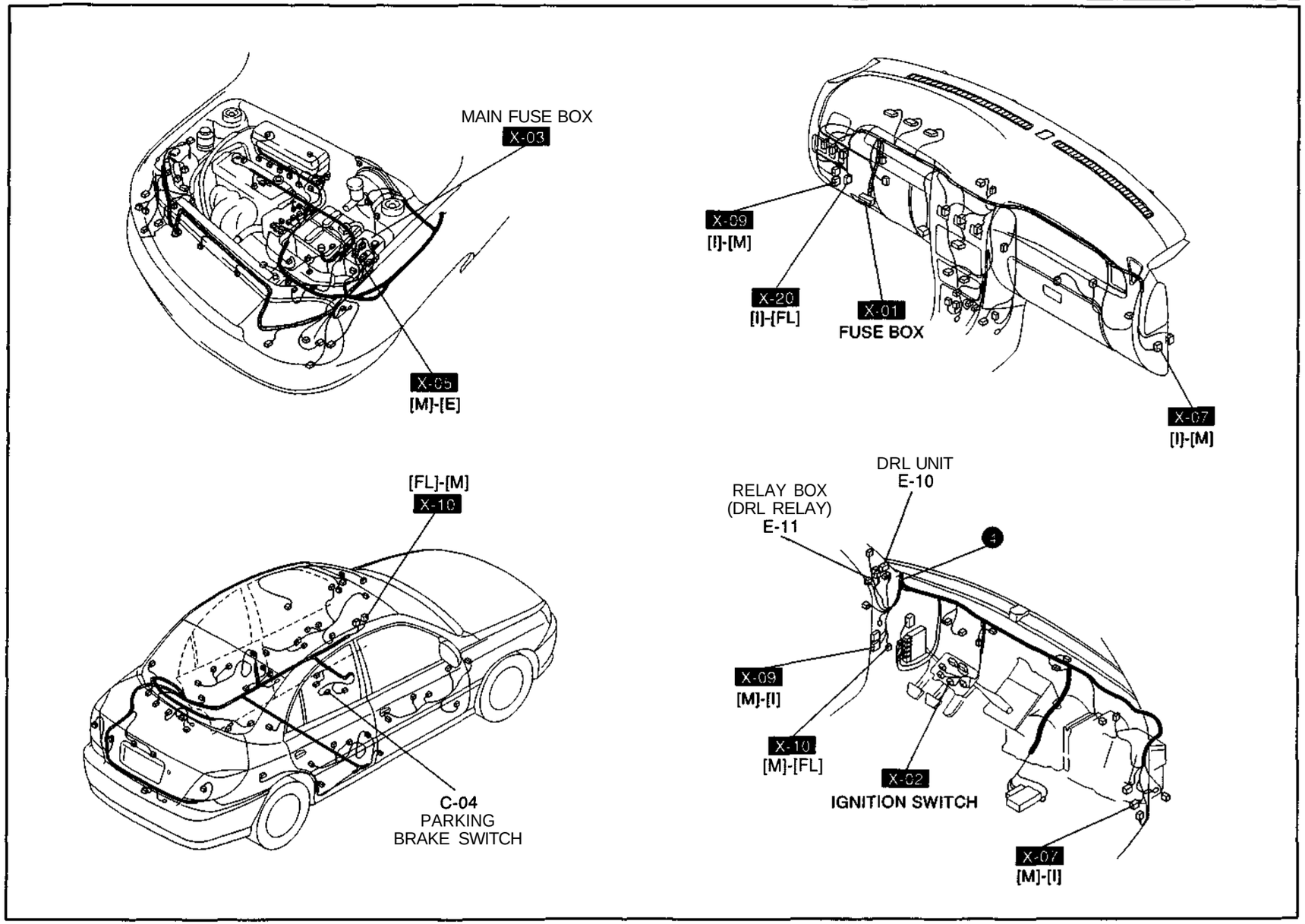
MAIN FUSE BOX
X-03
X-05
[M]-[E]
X-09
[I]-[M]
X-20
[I]-[FL]
X-01
FUSE BOX
X-07
[I]-[M]
[FL]-[M]
X-10
C-04
PARKING
BRAKE SWITCH
DRL UNIT
E-10
RELAY BOX
(DRL RELAY)
E-11
X-09
[M]-[I]
X-10
[M]-[FL]
X-02
IGNITION SWITCH
X-07
[M]-[I]

E-5 FRONT FOG LAMPS, POSITION LAMPS

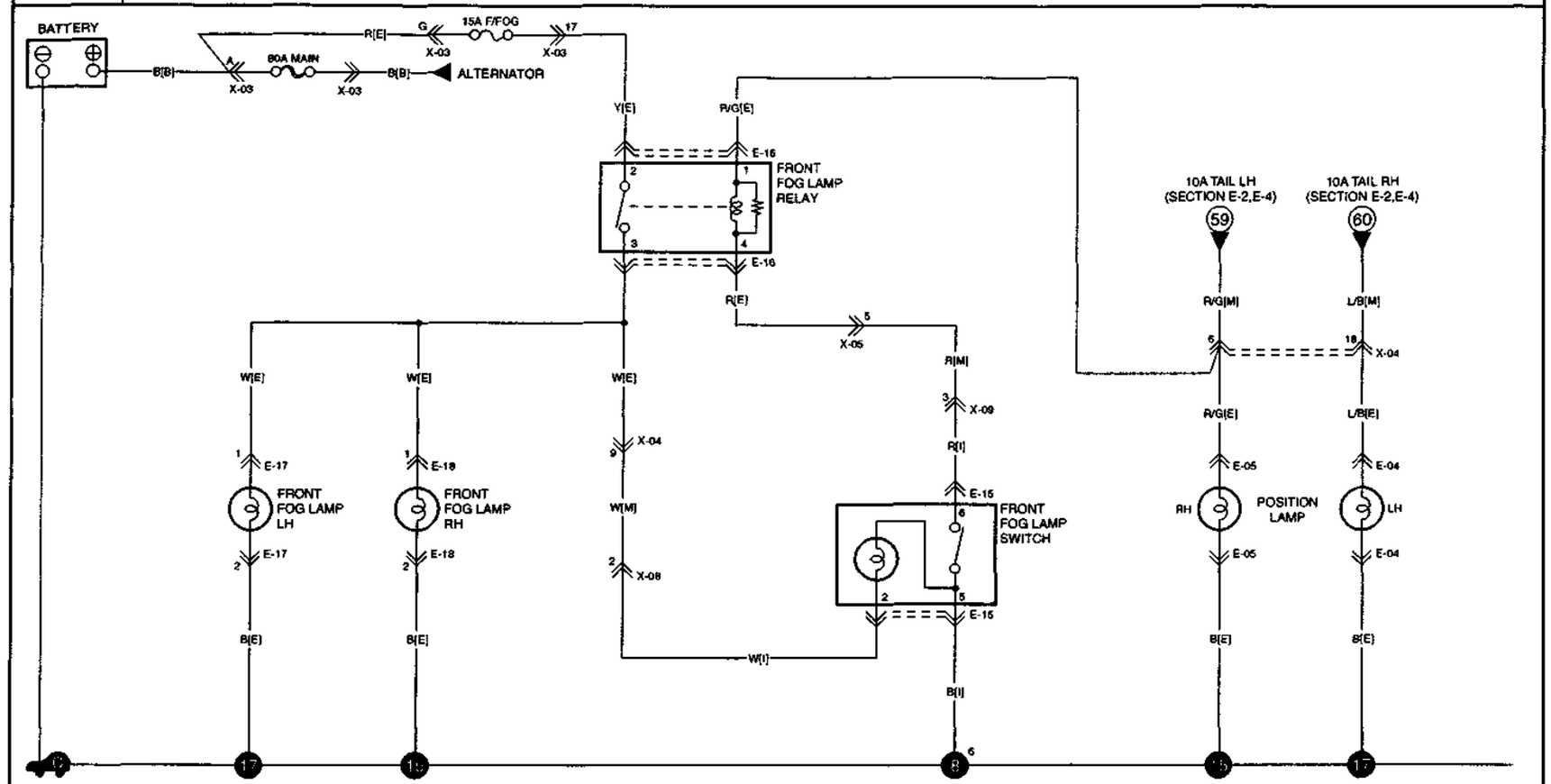

E-04 POSITION LAMP LH (E) B	E-05 POSITION LAMP RH (E) B	E-15 FRONT FOG LAMP SWITCH (I) G	E-16 FRONT FOG LAMP RELAY (E)	E-17 FRONT FOG LAMP LH (E)	E-18 FRONT FOG LAMP RH (E)
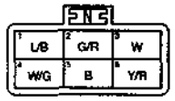	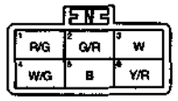	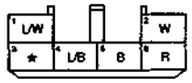	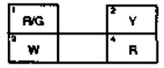	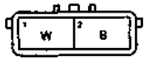	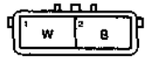

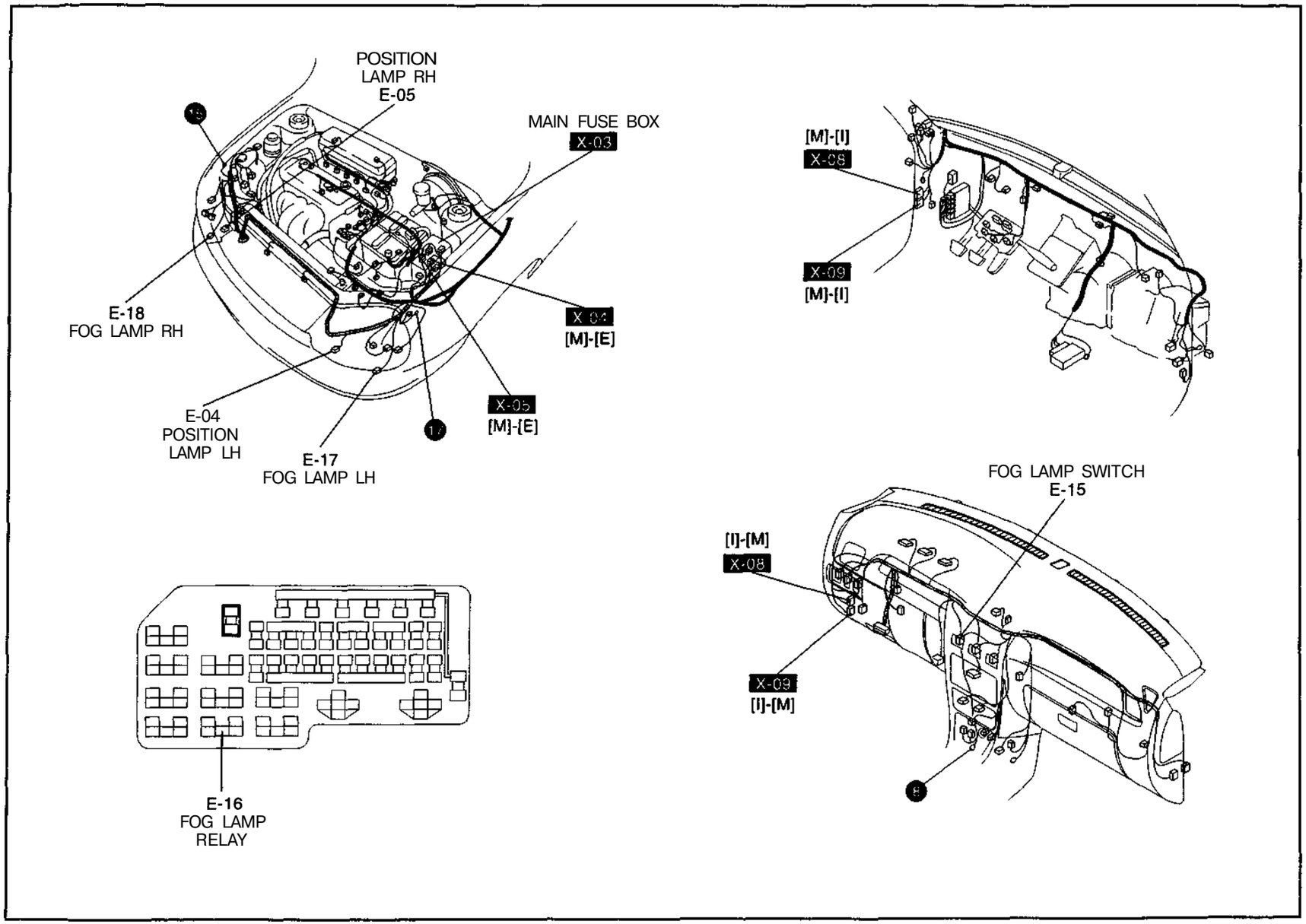
POSITION
LAMP RH
E-05
MAIN FUSE BOX
X-03
E-18
FOG LAMP RH
X-04
[M]-[E]
E-04
POSITION
LAMP LH
E-17
FOG LAMP LH
X-05
[M]-[E]
[M]-[I]
X-08
X-09
[M]-[I]
FOG LAMP SWITCH
E-15
[I]-[M]
X-08
X-09
[I]-[M]
E-16
FOG LAMP
RELAY

E-6 REAR FOG LAMPS, HEADLIGHT LEVELING DEVICE (HLLD)

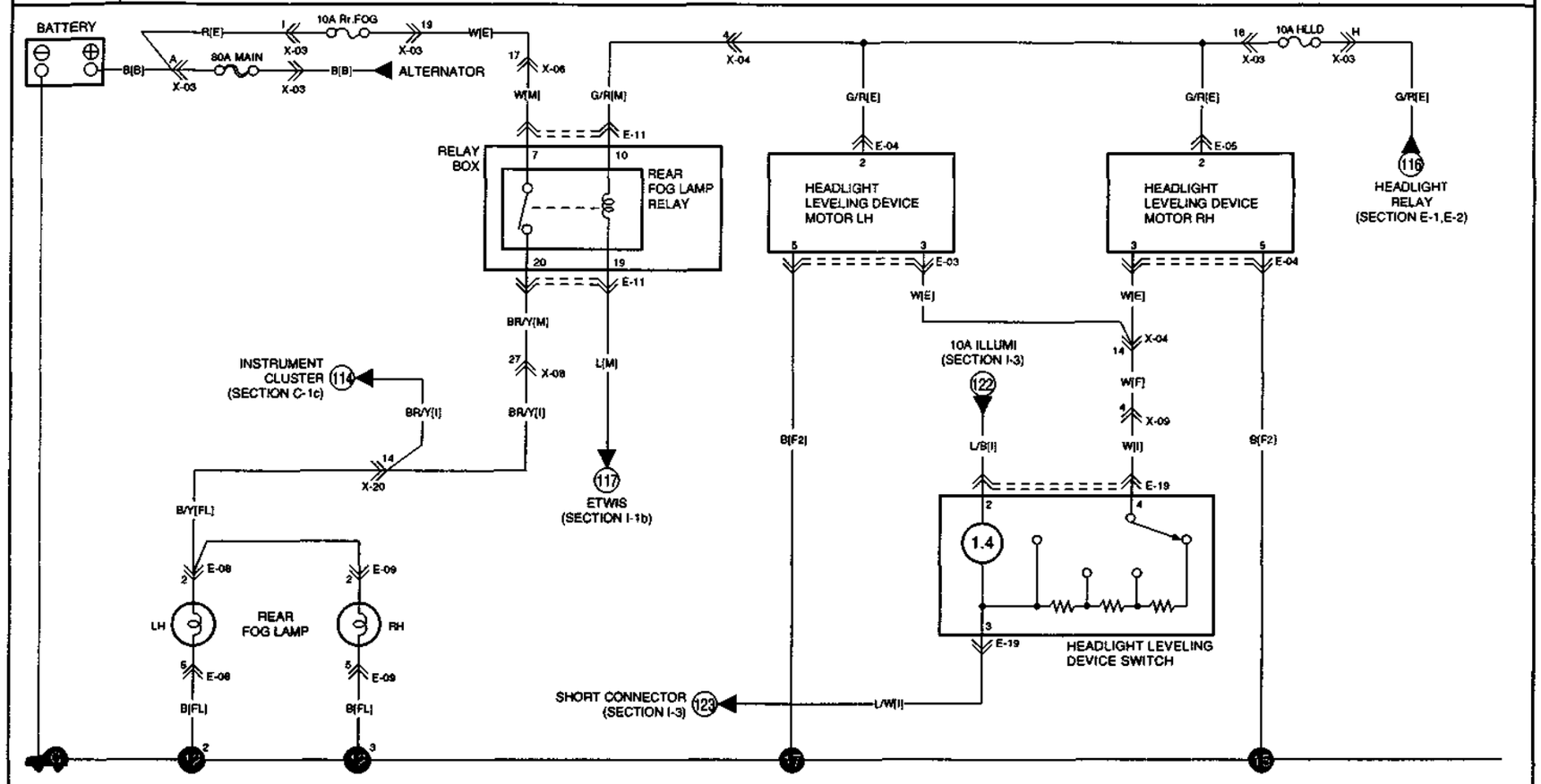

E-04 HEADLIGHT LEVELING DEVICE MOTOR LH [M] B

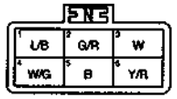

E-05 HEADLIGHT LEVELING DEVICE MOTOR RH [M] B

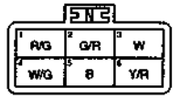

E-08 REAR COMBINATION LAMP LH [FL]

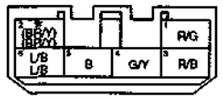

( ) : REAR FOG

E-09 REAR COMBINATION LAMP RH [FL]

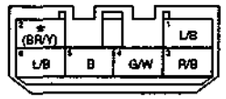

( ) : REAR FOG

E-11 RELAY BOX (REAR FOG LAMP RELAY) [M]

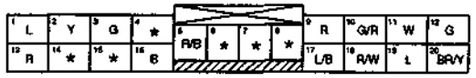

E-19 HEADLIGHT LEVELING DEVICE SWITCH [I]

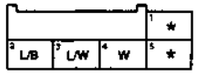

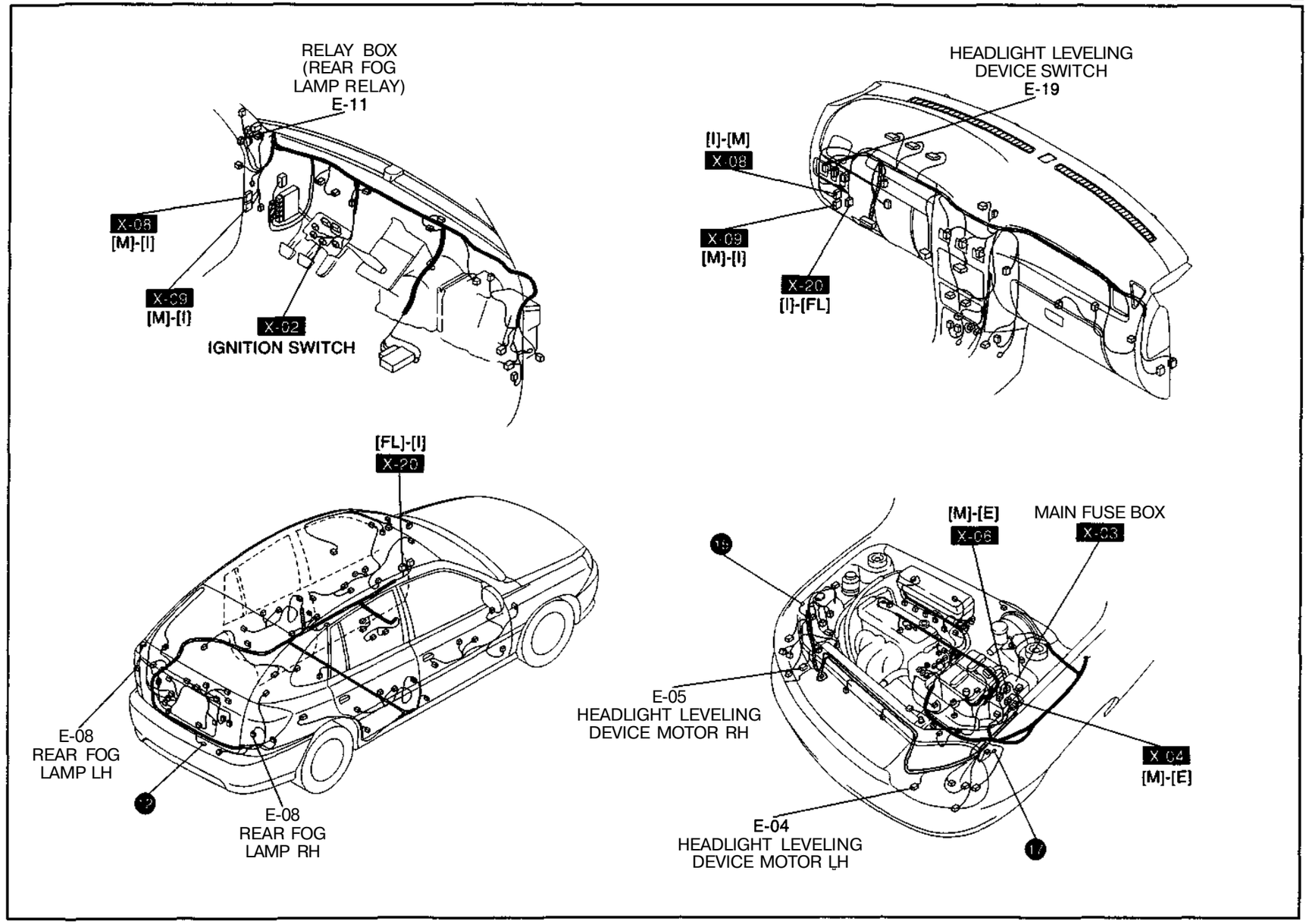
RELAY BOX
(REAR FOG
LAMP RELAY)
E-11
X-08
[M]-[I]
X-09
[M]-[I]
X-02
IGNITION SWITCH
HEADLIGHT LEVELING
DEVICE SWITCH
E-19
[I]-[M]
X-08
X-09
[M]-[I]
X-20
[I]-[FL]
[FL]-[I]
X-20
E-08
REAR FOG
LAMP LH
E-08
REAR FOG
LAMP RH
[M]-[E]
X-06
MAIN FUSE BOX
X-03
E-05
HEADLIGHT LEVELING
DEVICE MOTOR RH
X-04
[M]-[E]
E-04
HEADLIGHT LEVELING
DEVICE MOTOR LH

F-1 TURN & HAZARD FLASHER UNIT

< >. AIRBAG ONLY

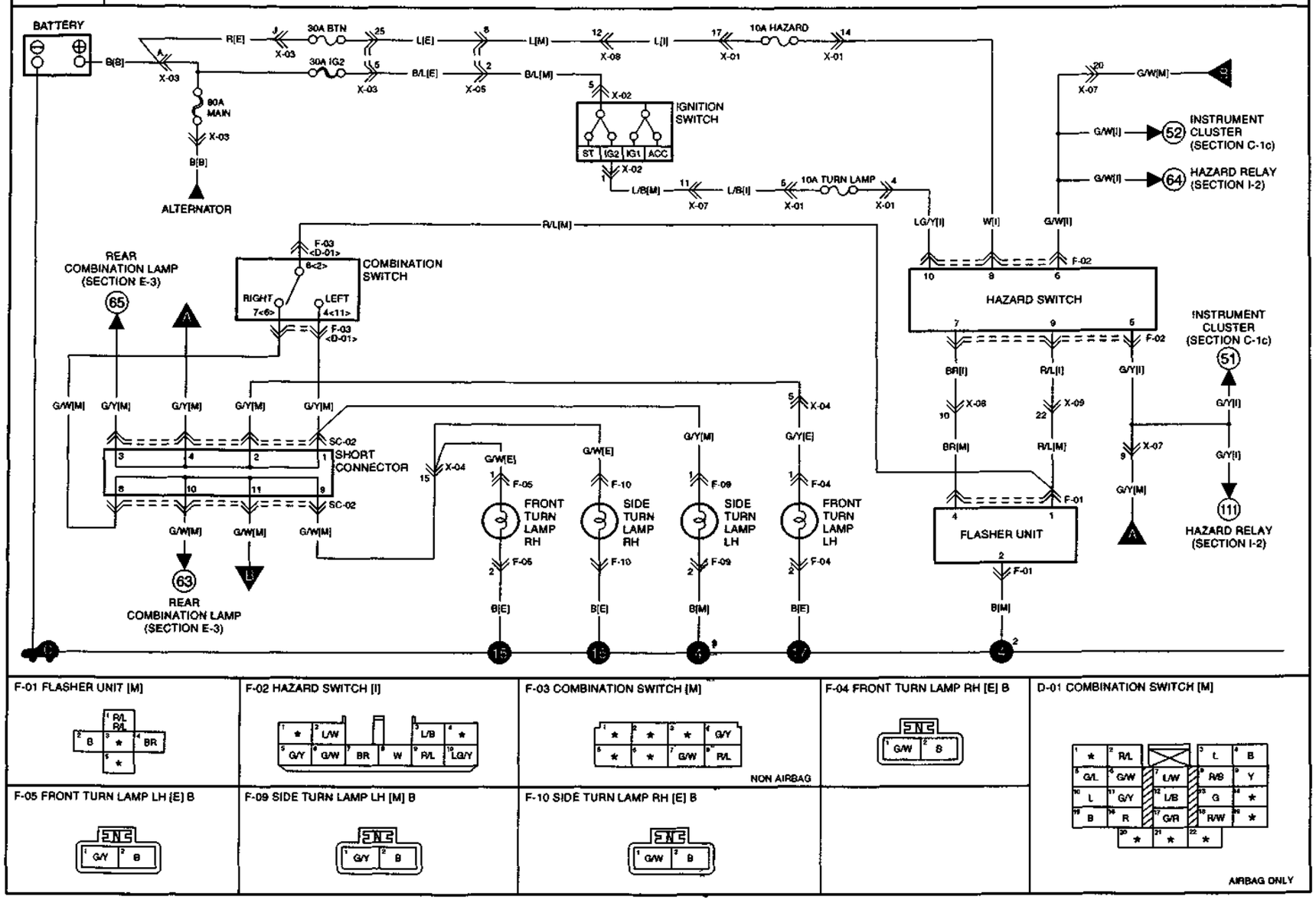

F-01 FLASHER UNIT [M]

F-02 HAZARD SWITCH [I]

F-03 COMBINATION SWITCH [M]

NON AIRBAG

F-04 FRONT TURN LAMP RH [E] B

D-01 COMBINATION SWITCH [M]

AIRBAG ONLY

F-05 FRONT TURN LAMP LH [E] B

F-09 SIDE TURN LAMP LH [M] B

F-10 SIDE TURN LAMP RH [E] B

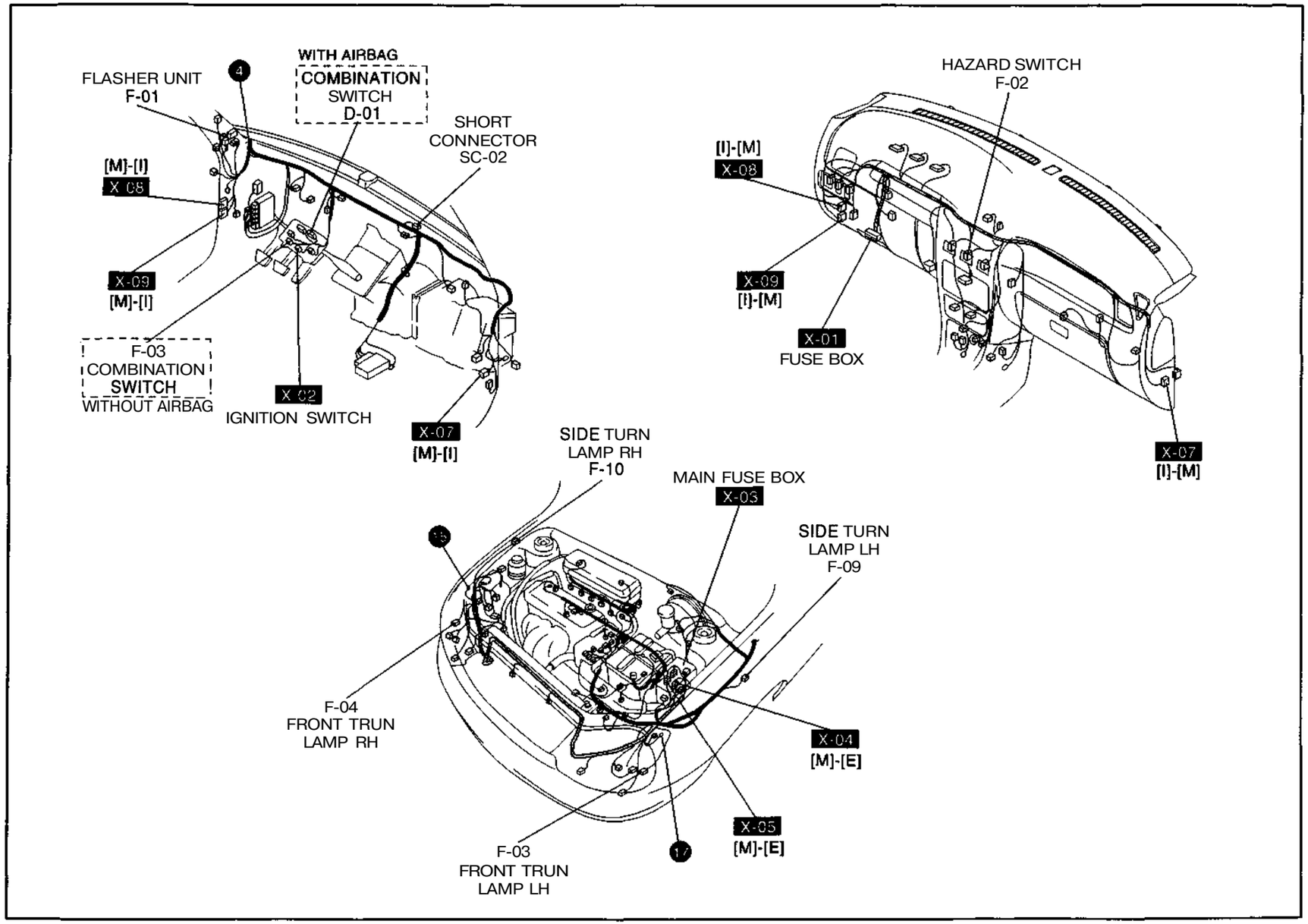
FLASHER UNIT
F-01
4
WITH AIRBAG
COMBINATION
SWITCH
D-01
SHORT
CONNECTOR
SC-02
[M]-[I]
X-08
X-09
[M]-[I]
F-03
COMBINATION
SWITCH
WITHOUT AIRBAG
X-02
IGNITION SWITCH
X-07
[M]-[I]
HAZARD SWITCH
F-02
[I]-[M]
X-08
X-09
[I]-[M]
X-01
FUSE BOX
X-07
[I]-[M]
SIDE TURN
LAMP RH
F-10
MAIN FUSE BOX
X-03
SIDE TURN
LAMP LH
F-09
F-04
FRONT TRUN
LAMP RH
X-04
[M]-[E]
X-05
[M]-[E]
F-03
FRONT TRUN
LAMP LH

F-2 STOP LIGHTS, BACK-UP LIGHTS, SHIFT LOCK UNIT

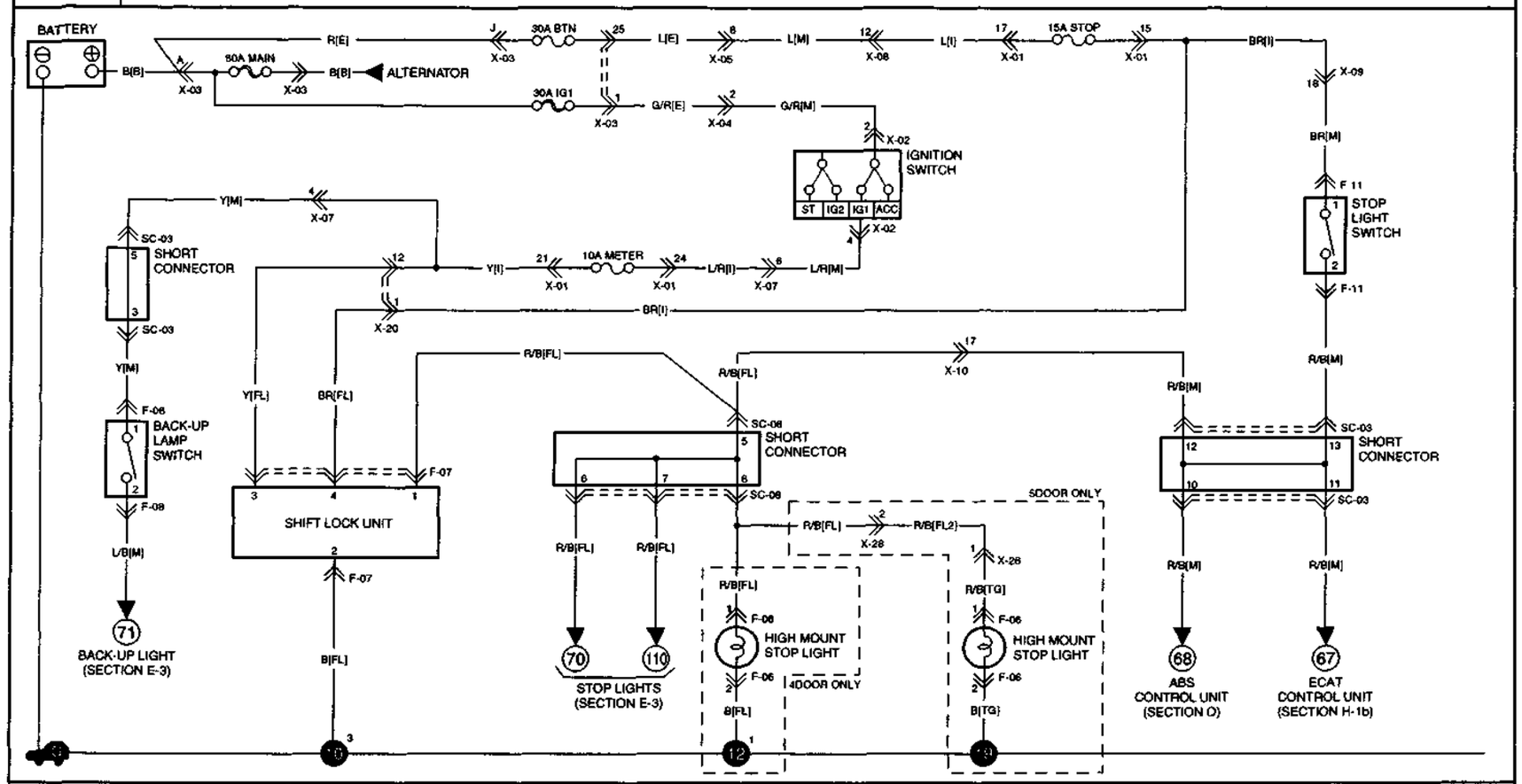

F-06 HIGH MOUNT STOP LIGHT [FL] : 4DOOR F-06 HIGH MOUNT STOP LIGHT [TG] 5DOOR	F-07 SHIFT LOCK UNIT [FL]	F-08 BACK-UP LAMP SWITCH [M] B	F-11 STOP LIGHT SWITCH [M]
R/B, B	BR, Y, B, R/B	Y, L/B	BR, R/B

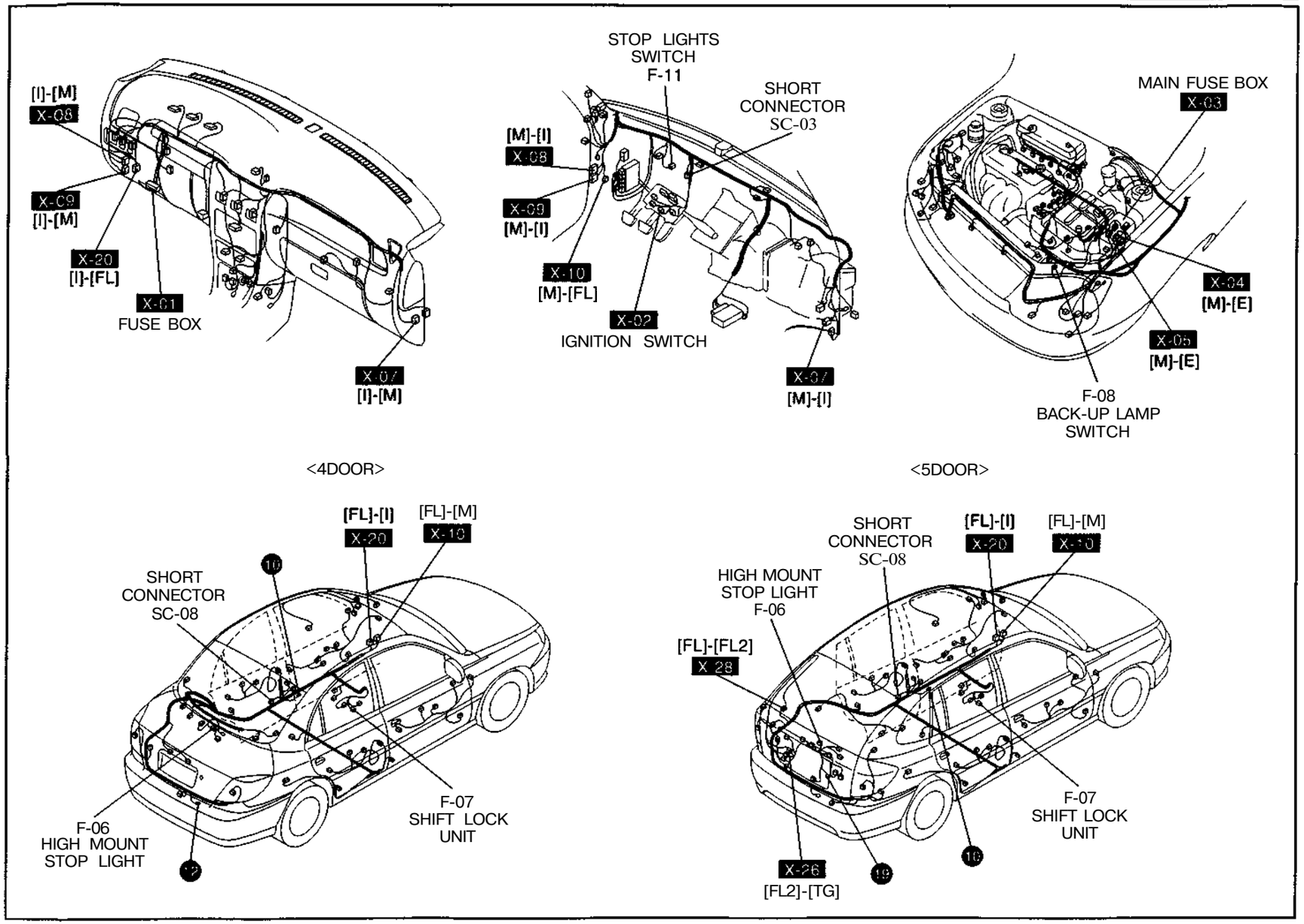
[I]-[M]
X-08
X-09
[I]-[M]
X-20
[I]-[FL]
X-01
FUSE BOX
X-07
[I]-[M]
STOP LIGHTS
SWITCH
F-11
SHORT
CONNECTOR
SC-03
[M]-[I]
X-08
X-09
[M]-[I]
X-10
[M]-[FL]
X-02
IGNITION SWITCH
X-07
[M]-[I]
MAIN FUSE BOX
X-03
X-04
[M]-[E]
X-05
[M]-[E]
F-08
BACK-UP LAMP
SWITCH
<4DOOR>
<5DOOR>
[FL]-[I]
X-20
[FL]-[M]
X-10
SHORT
CONNECTOR
SC-08
F-06
HIGH MOUNT
STOP LIGHT
F-07
SHIFT LOCK
UNIT
SHORT
CONNECTOR
SC-08
HIGH MOUNT
STOP LIGHT
F-06
[FL]-[FL2]
X 28
[FL]-[I]
X-20
[FL]-[M]
X-10
F-07
SHIFT LOCK
UNIT
X-26
[FL2]-[TG]

G HEATER & AIR CONDITIONER SYSTEM

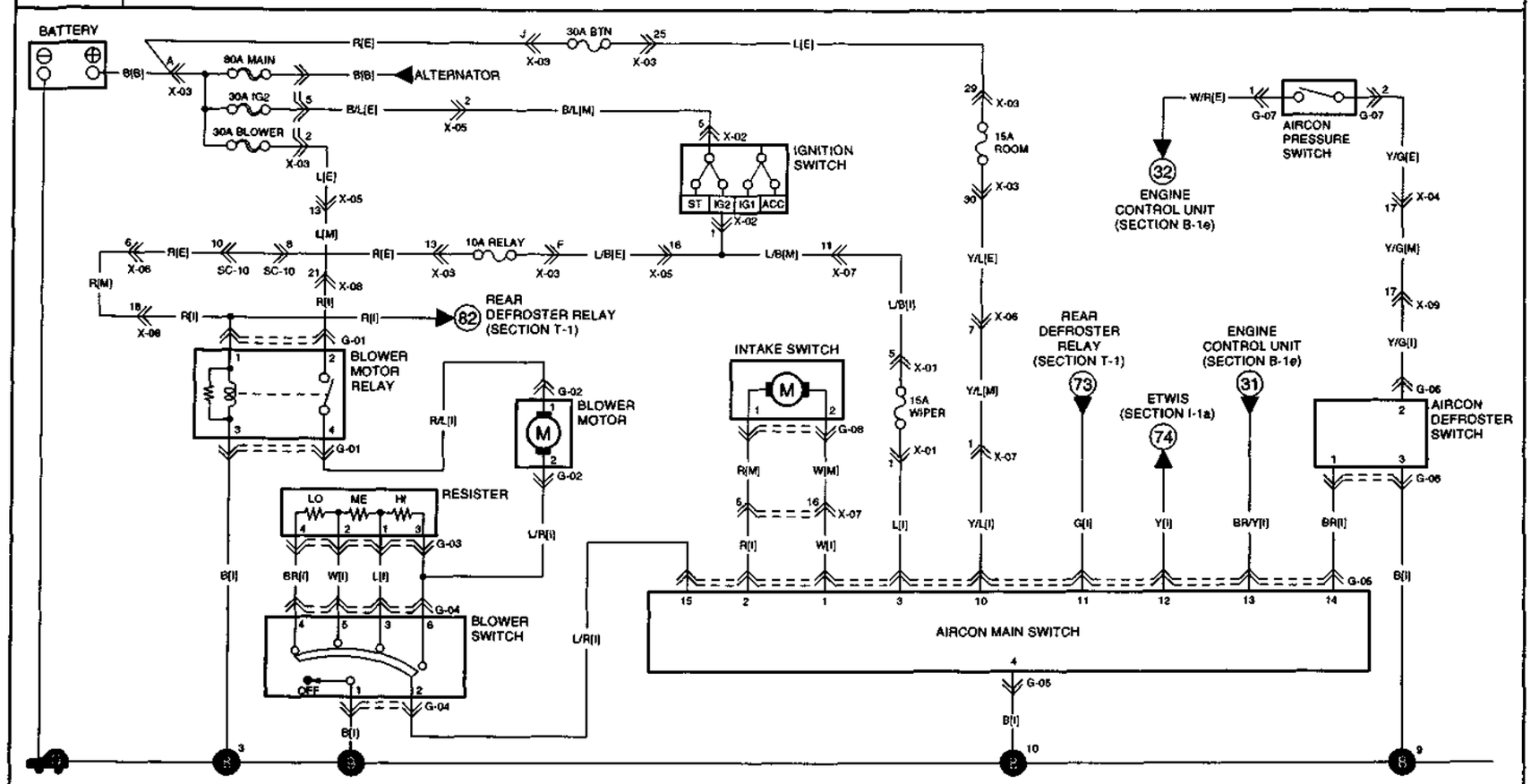

G-01 BLOWER MOTOR RELAY [I]	G-02 BLOWER MOTOR [I]	G-03 RESISTER [I]	G-04 BLOWER SWITCH [I]	G-05 AIRCON MAIN SWITCH [I]
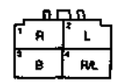		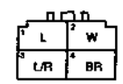	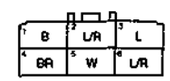	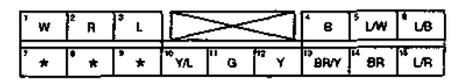

G-06 AIRCON DEFROSTER SWITCH [I]	G-07 A/C PRESSURE SWITCH [E]	G-08 INTAKE SWITCH [M]
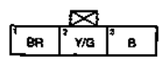	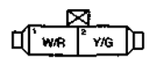	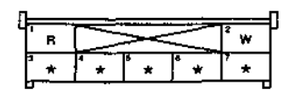

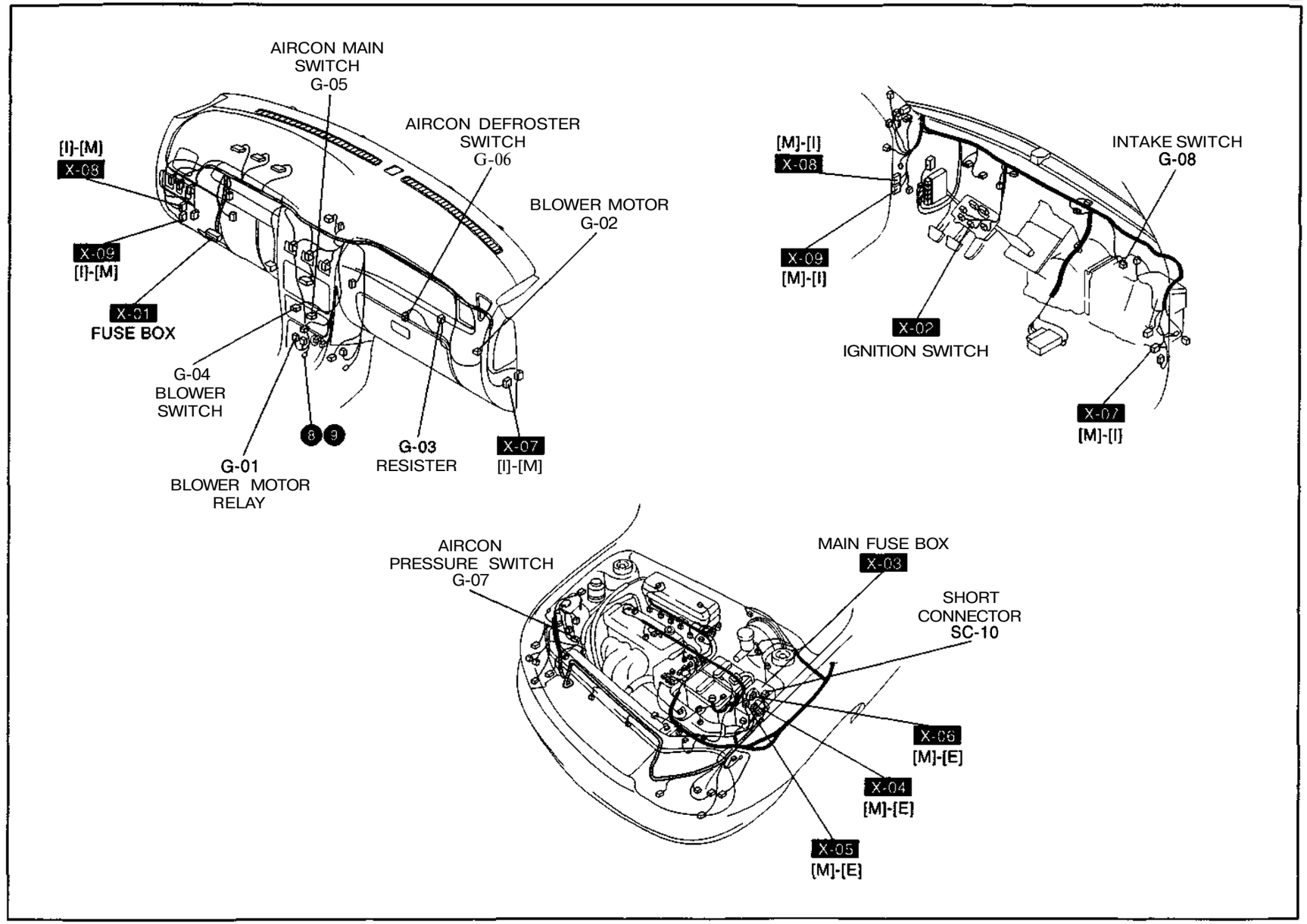
AIRCON MAIN SWITCH G-05
AIRCON DEFROSTER SWITCH G-06
BLOWER MOTOR G-02
[I]-[M]
X-08
X-09
[I]-[M]
X-01
FUSE BOX
G-04 BLOWER SWITCH
8
9
G-01 BLOWER MOTOR RELAY
G-03 RESISTER
X-07
[I]-[M]
[M]-[I]
X-08
X-09
[M]-[I]
INTAKE SWITCH G-08
X-02
IGNITION SWITCH
X-07
[M]-[I]
AIRCON PRESSURE SWITCH G-07
MAIN FUSE BOX
X-03
SHORT CONNECTOR SC-10
X-06
[M]-[E]
X-04
[M]-[E]
X-05
[M]-[E]

H-1a ECAT CONTROL SYSTEM

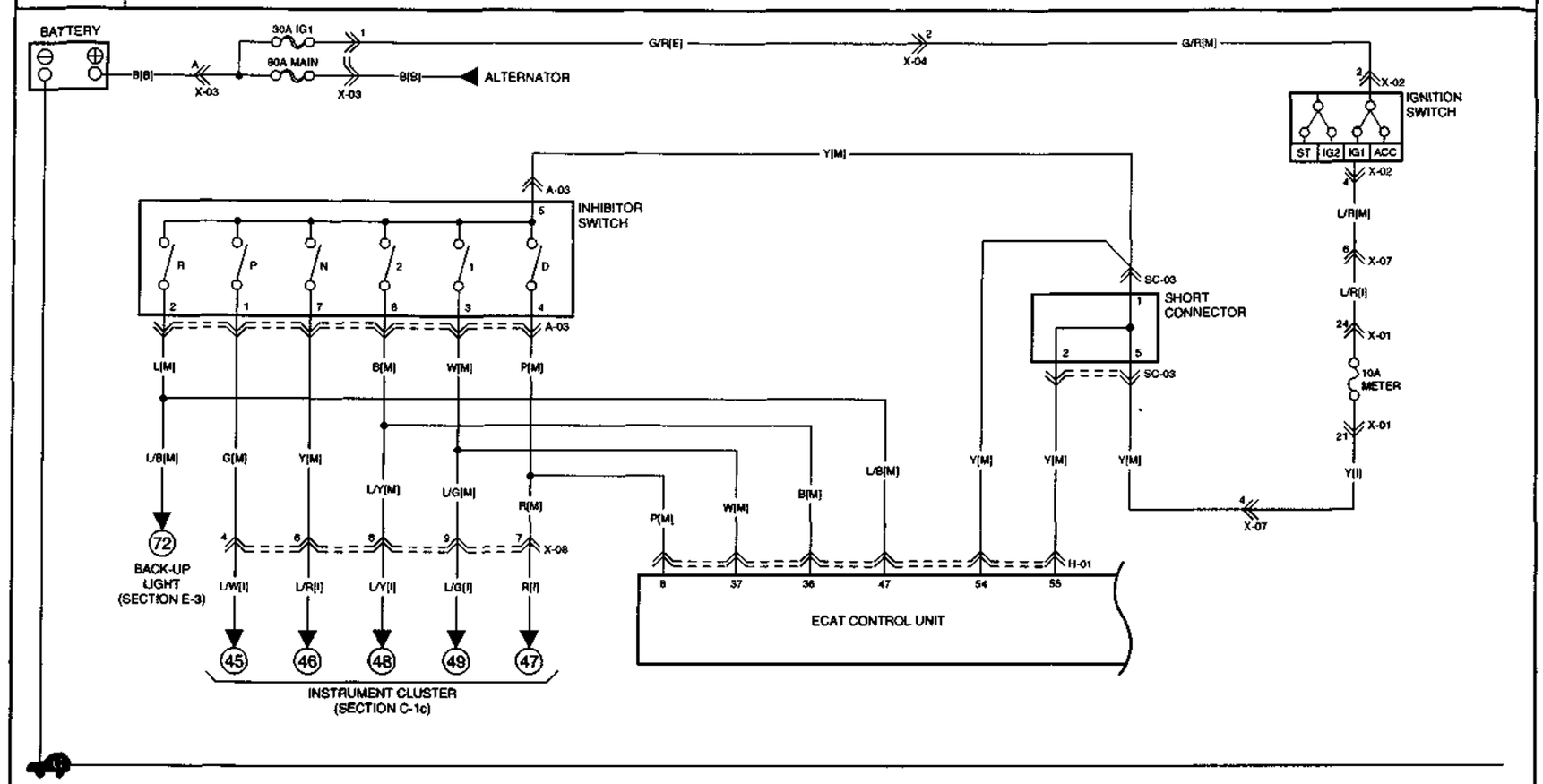

H-01 ECAT CONTROL UNIT [M]

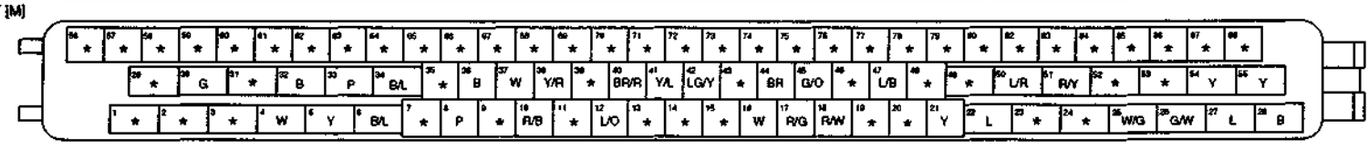

A-03 INHIBITOR SWITCH [M] GY

1 G	2 L	3 W	4 P	5 Y
6 R		7 Y	8 B	9 L

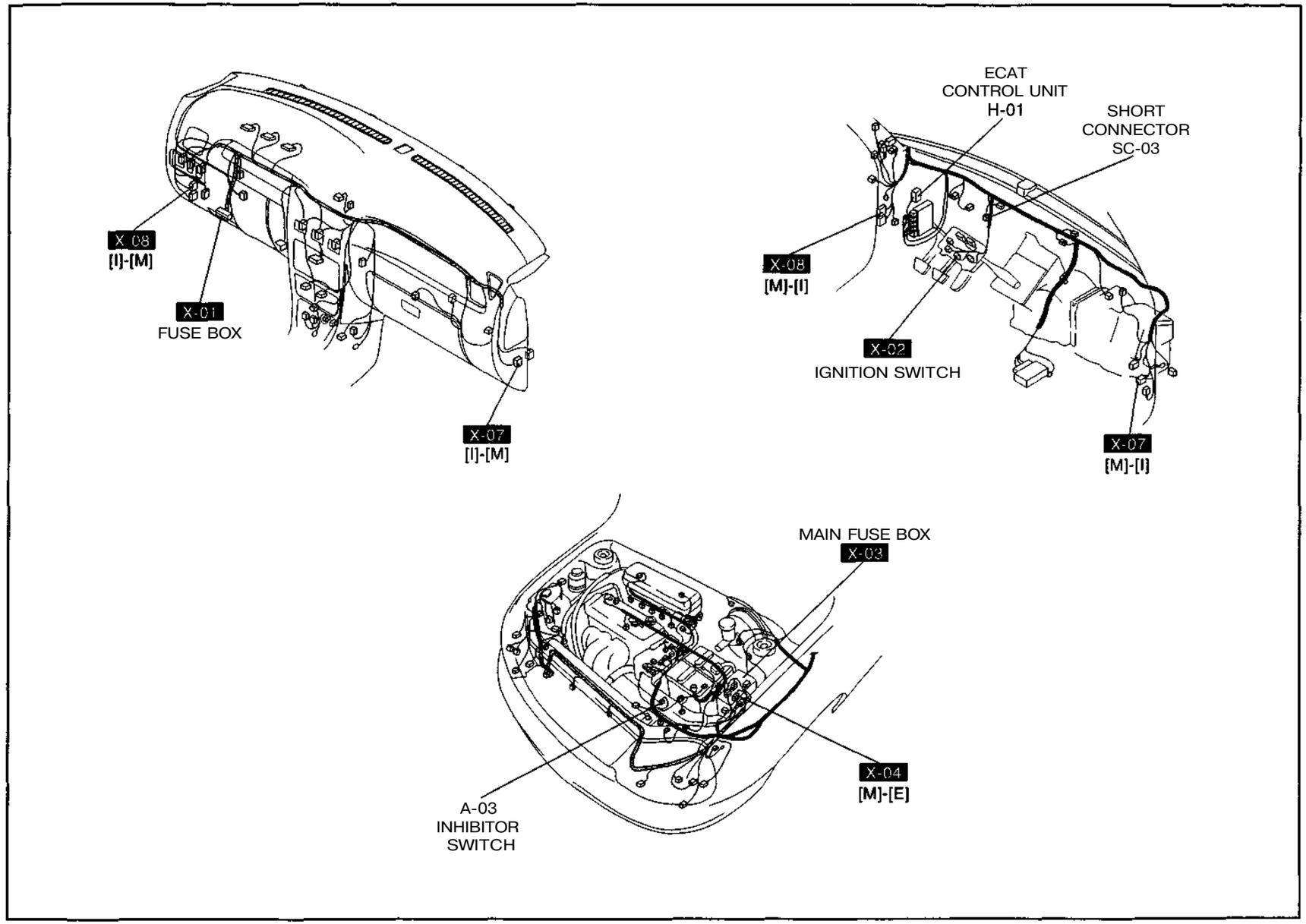
X-08
[I]-[M]
X-01
FUSE BOX
X-07
[I]-[M]
ECAT
CONTROL UNIT
H-01
SHORT
CONNECTOR
SC-03
X-08
[M]-[I]
X-02
IGNITION SWITCH
X-07
[M]-[I]
MAIN FUSE BOX
X-03
X-04
[M]-[E]
A-03
INHIBITOR
SWITCH

H-1b ECAT CONTROL SYSTEM

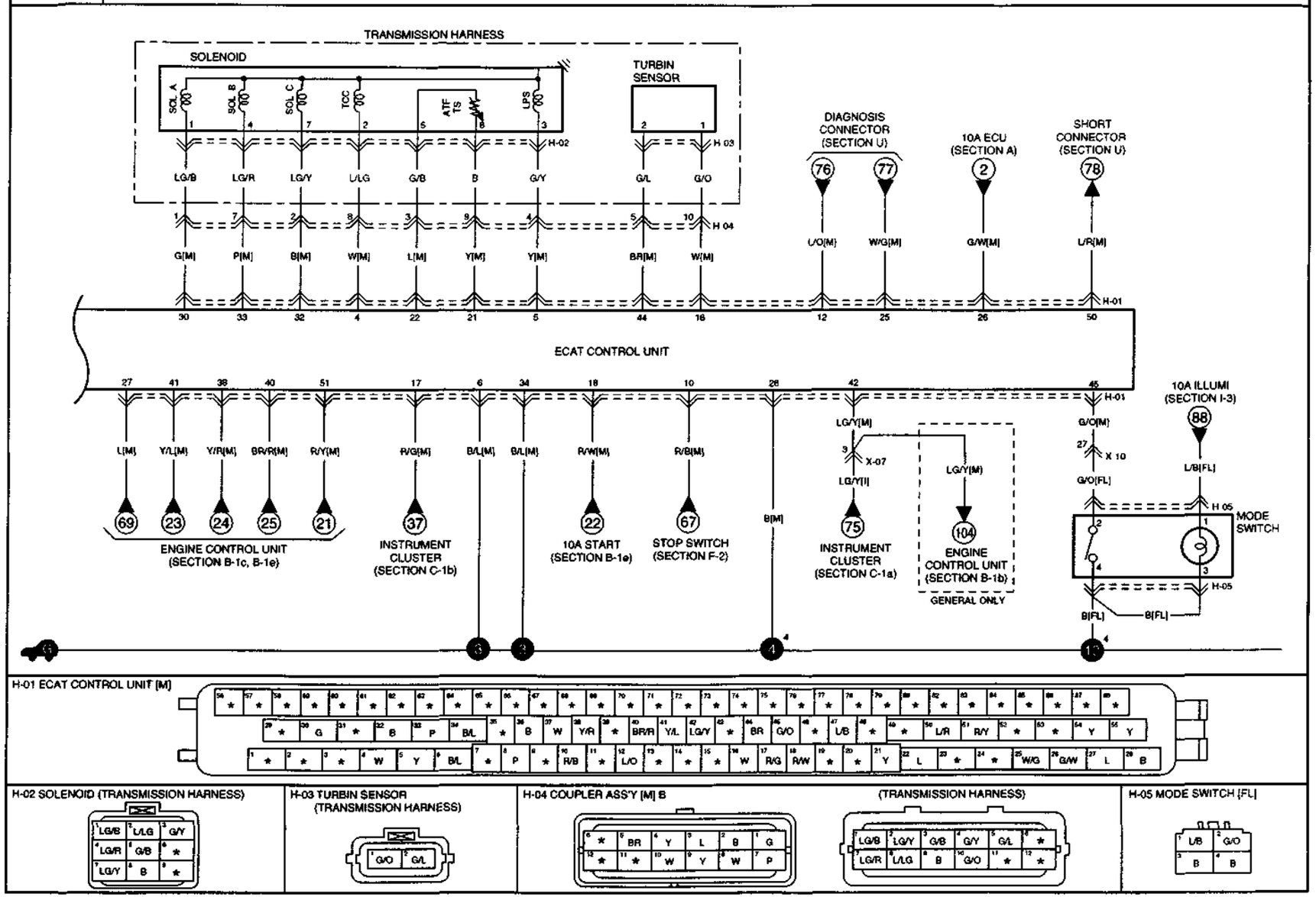

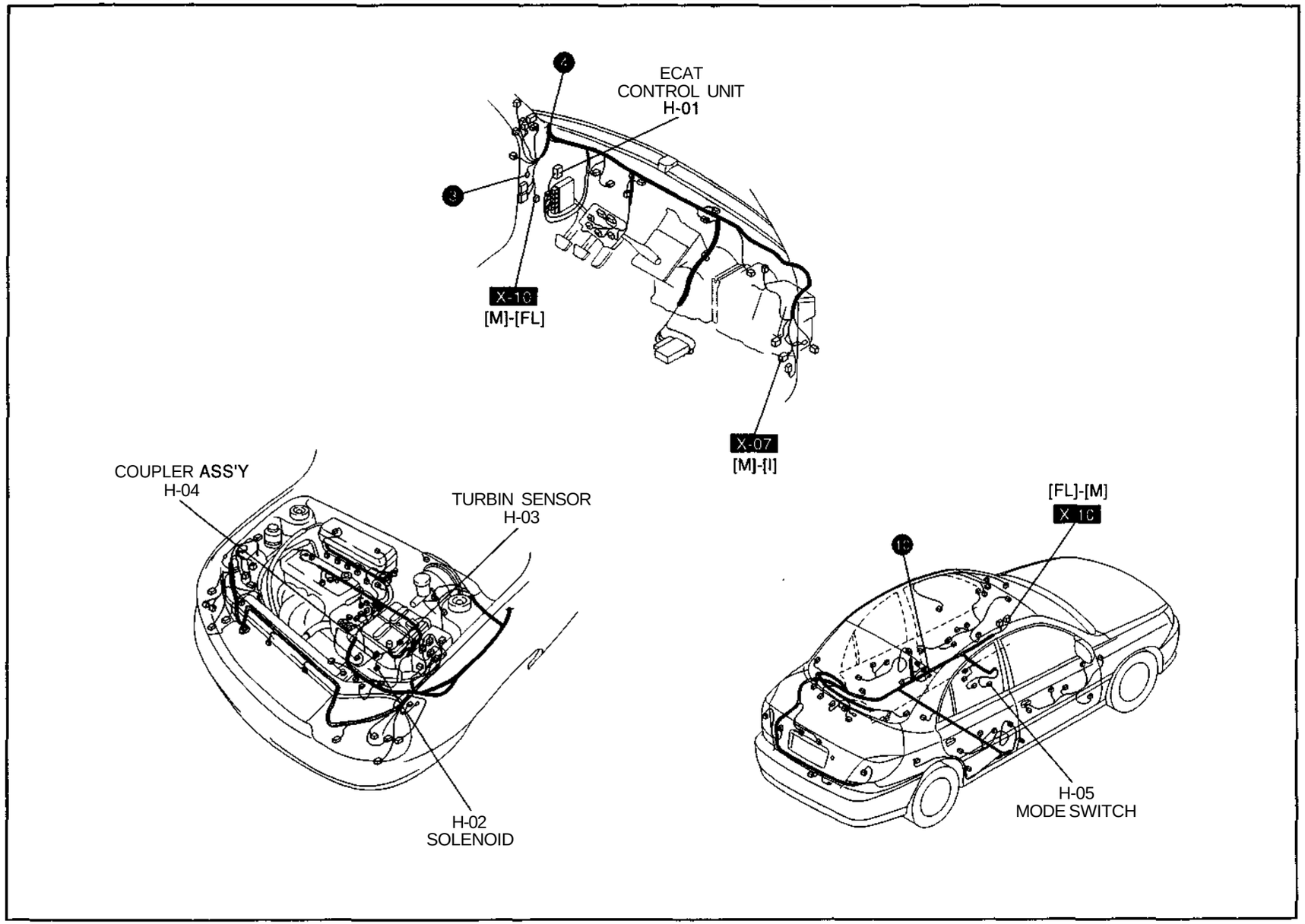
ECAT
CONTROL UNIT
H-01
X-10
[M]-[FL]
X-07
[M]-[I]
COUPLER ASS'Y
H-04
TURBIN SENSOR
H-03
H-02
SOLENOID
[FL]-[M]
X 10
H-05
MODE SWITCH

I-1a ETWIS

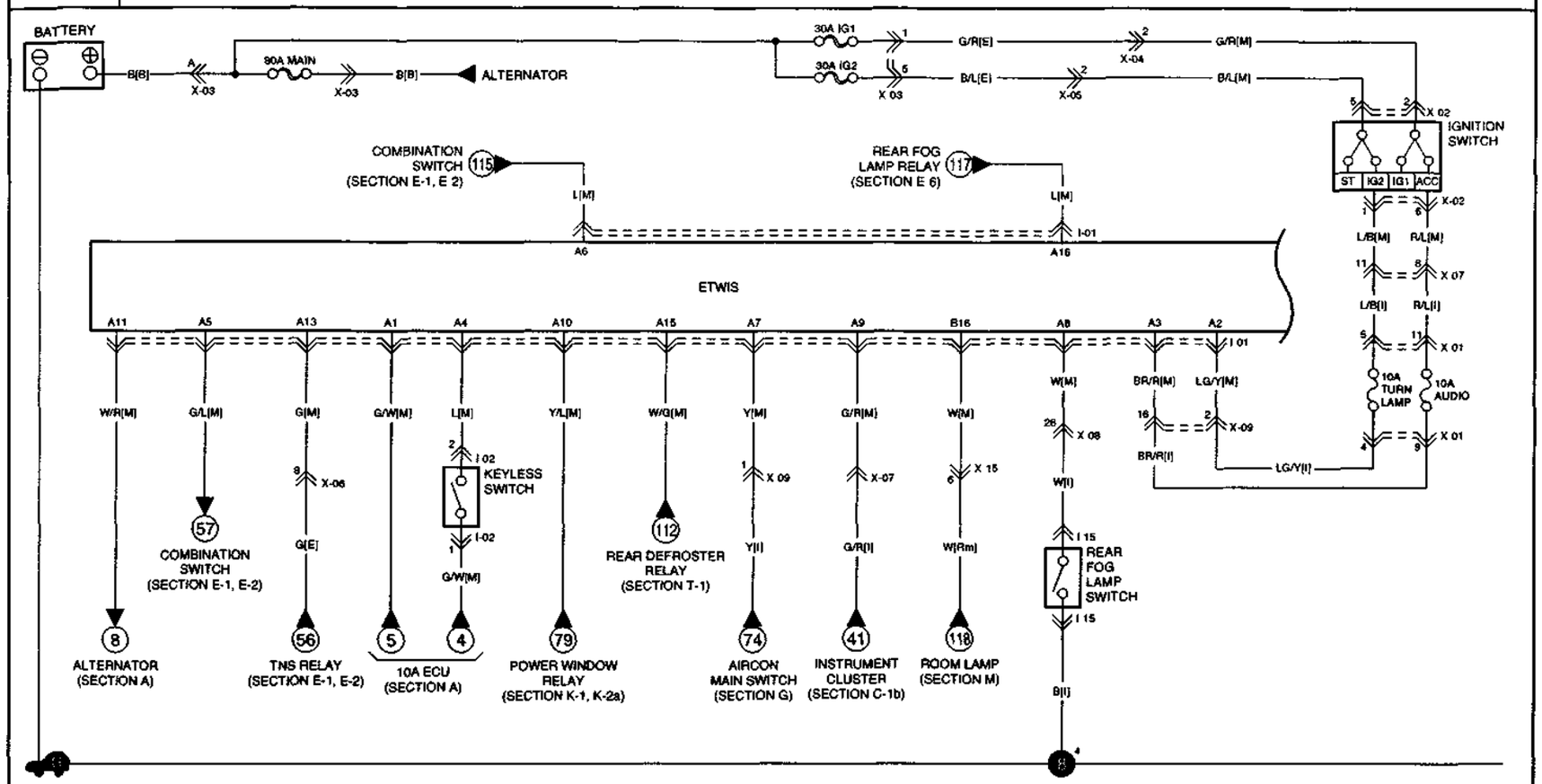

I-01 ETWIS [M]

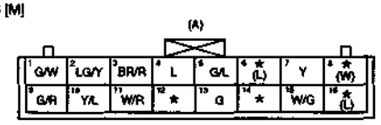

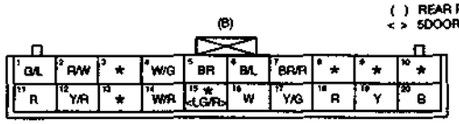

I-02 KEYLESS SWITCH [M] B

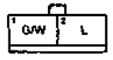

I-15 REAR FOG LAMP SWITCH [I]

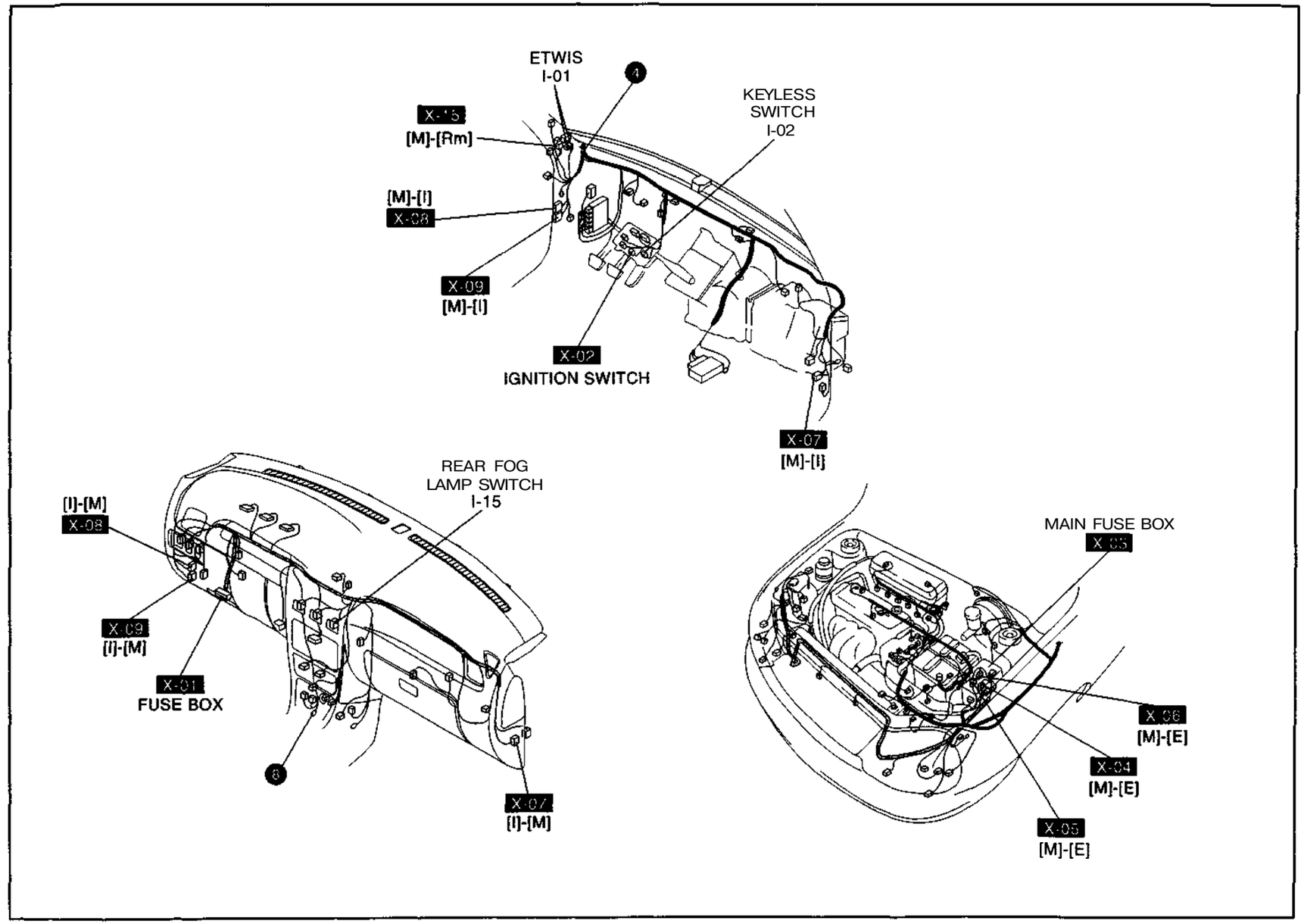
ETWIS
I-01
4
KEYLESS
SWITCH
I-02
X-15
[M]-[Rm]
[M]-[I]
X-08
X-09
[M]-[I]
X-02
IGNITION SWITCH
X-07
[M]-[I]
REAR FOG
LAMP SWITCH
I-15
[I]-[M]
X-08
X-09
[I]-[M]
X-01
FUSE BOX
8
X-07
[I]-[M]
MAIN FUSE BOX
X-03
X-06
[M]-[E]
X-04
[M]-[E]
X-05
[M]-[E]

I-1b ETWIS

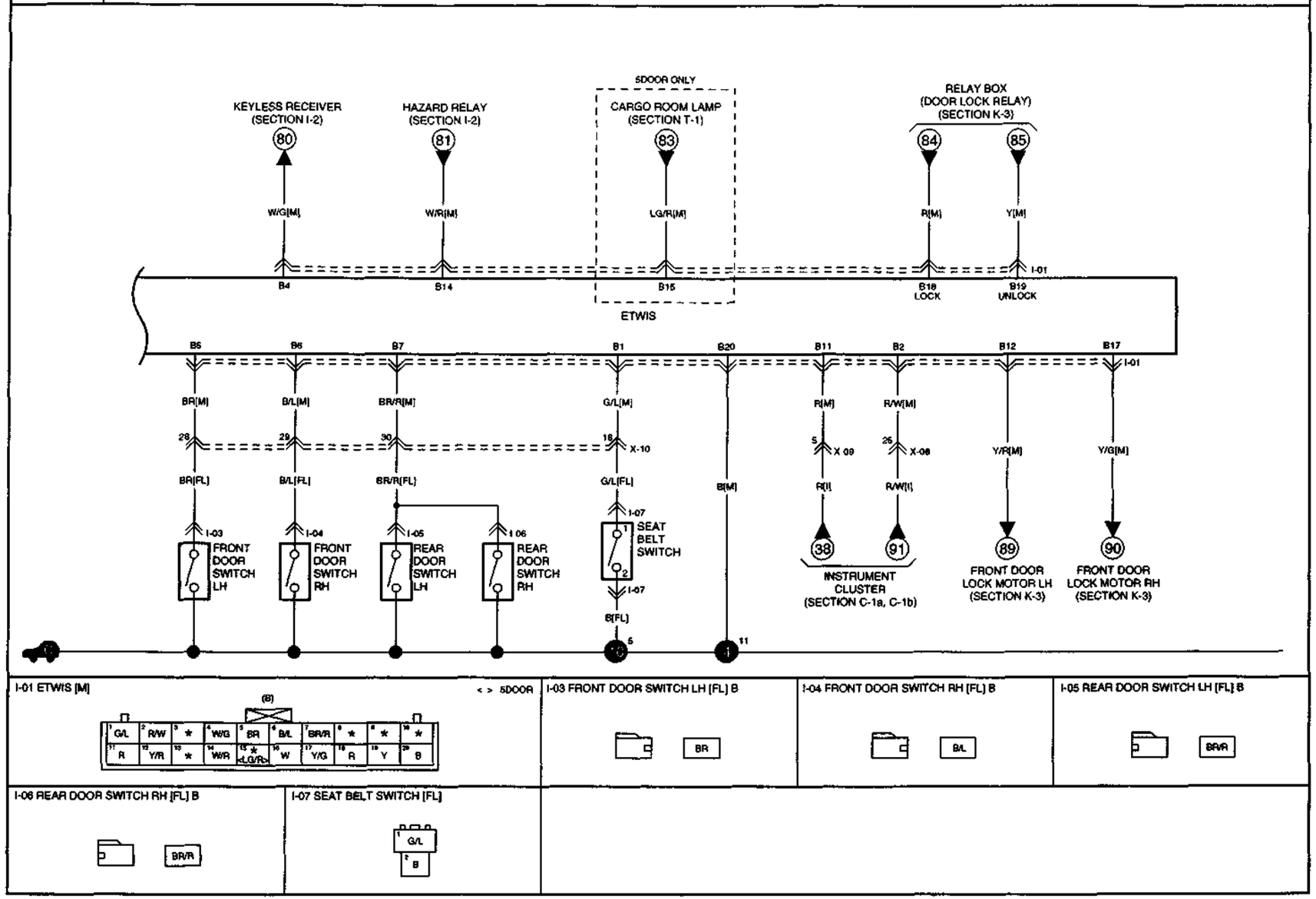
5DOOR ONLY
KEYLESS RECEIVER (SECTION I-2)
80
HAZARD RELAY (SECTION I-2)
81
CARGO ROOM LAMP (SECTION T-1)
83
RELAY BOX (DOOR LOCK RELAY) (SECTION K-3)
84
85
W/G[M]
W/R[M]
LG/R[M]
R[M]
Y[M]
I-01
B4
B14
B15
B18 LOCK
B19 UNLOCK
ETWIS
B5
B6
B7
B1
B20
B11
B2
B12
B17
BR[M]
B/L[M]
BR/R[M]
G/L[M]
R[M]
R/W[M]
Y/R[M]
Y/G[M]
28
29
30
18
X-10
5
X-09
26
X-08
BR[FL]
B/L[FL]
BR/R[FL]
G/L[FL]
B[M]
R[I]
R/W[I]
I-03
I-04
I-05
I-06
I-07
FRONT DOOR SWITCH LH
FRONT DOOR SWITCH RH
REAR DOOR SWITCH LH
REAR DOOR SWITCH RH
SEAT BELT SWITCH
B[FL]
38
91
INSTRUMENT CLUSTER (SECTION C-1a, C-1b)
89
FRONT DOOR LOCK MOTOR LH (SECTION K-3)
90
FRONT DOOR LOCK MOTOR RH (SECTION K-3)
I-01 ETWIS [M]
< > 5DOOR
(B)
G/L
R/W
W/G
BR
B/L
BR/R
R
Y/R
W/R
W
Y/G
Y
B
I-03 FRONT DOOR SWITCH LH [FL] B
BR
I-04 FRONT DOOR SWITCH RH [FL] B
B/L
I-05 REAR DOOR SWITCH LH [FL] B
BR/R
I-06 REAR DOOR SWITCH RH [FL] B
BR/R
I-07 SEAT BELT SWITCH [FL]
G/L
B

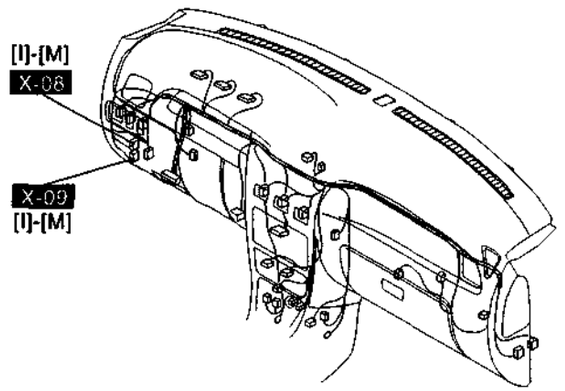
[I]-[M]
X-08
X-09
[I]-[M]

<4DOOR>

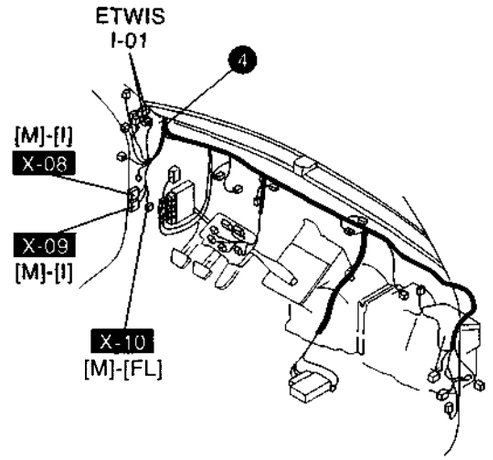
ETWIS
I-01
4
[M]-[I]
X-08
X-09
[M]-[I]
X-10
[M]-[FL]

<5DOOR>

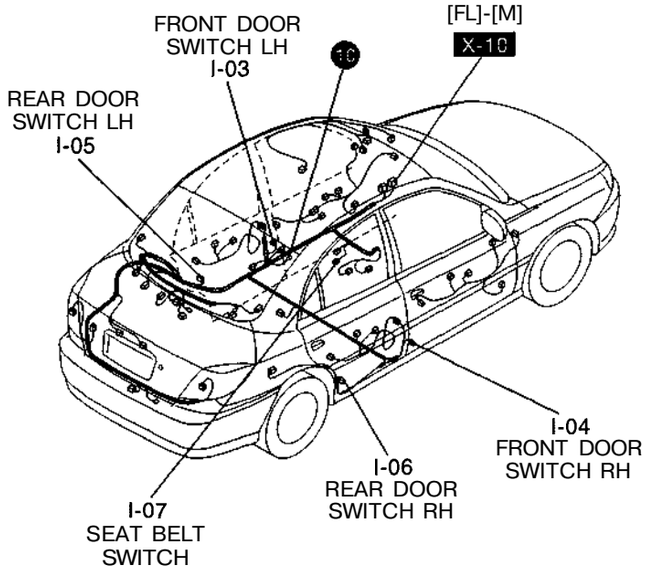
FRONT DOOR
SWITCH LH
I-03
10
[FL]-[M]
X-10
REAR DOOR
SWITCH LH
I-05
I-04
FRONT DOOR
SWITCH RH
I-06
REAR DOOR
SWITCH RH
I-07
SEAT BELT
SWITCH

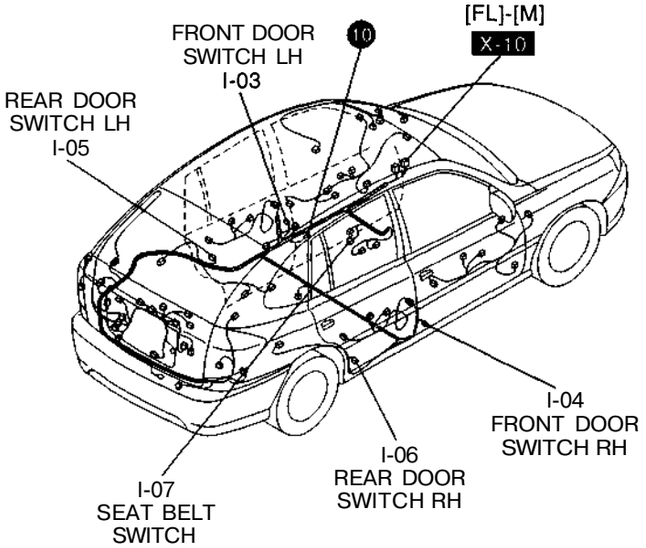
FRONT DOOR
SWITCH LH
I-03
10
[FL]-[M]
X-10
REAR DOOR
SWITCH LH
I-05
I-04
FRONT DOOR
SWITCH RH
I-06
REAR DOOR
SWITCH RH
I-07
SEAT BELT
SWITCH

I-2 KEYLESS RECEIVER, HAZARD RELAY, HORN

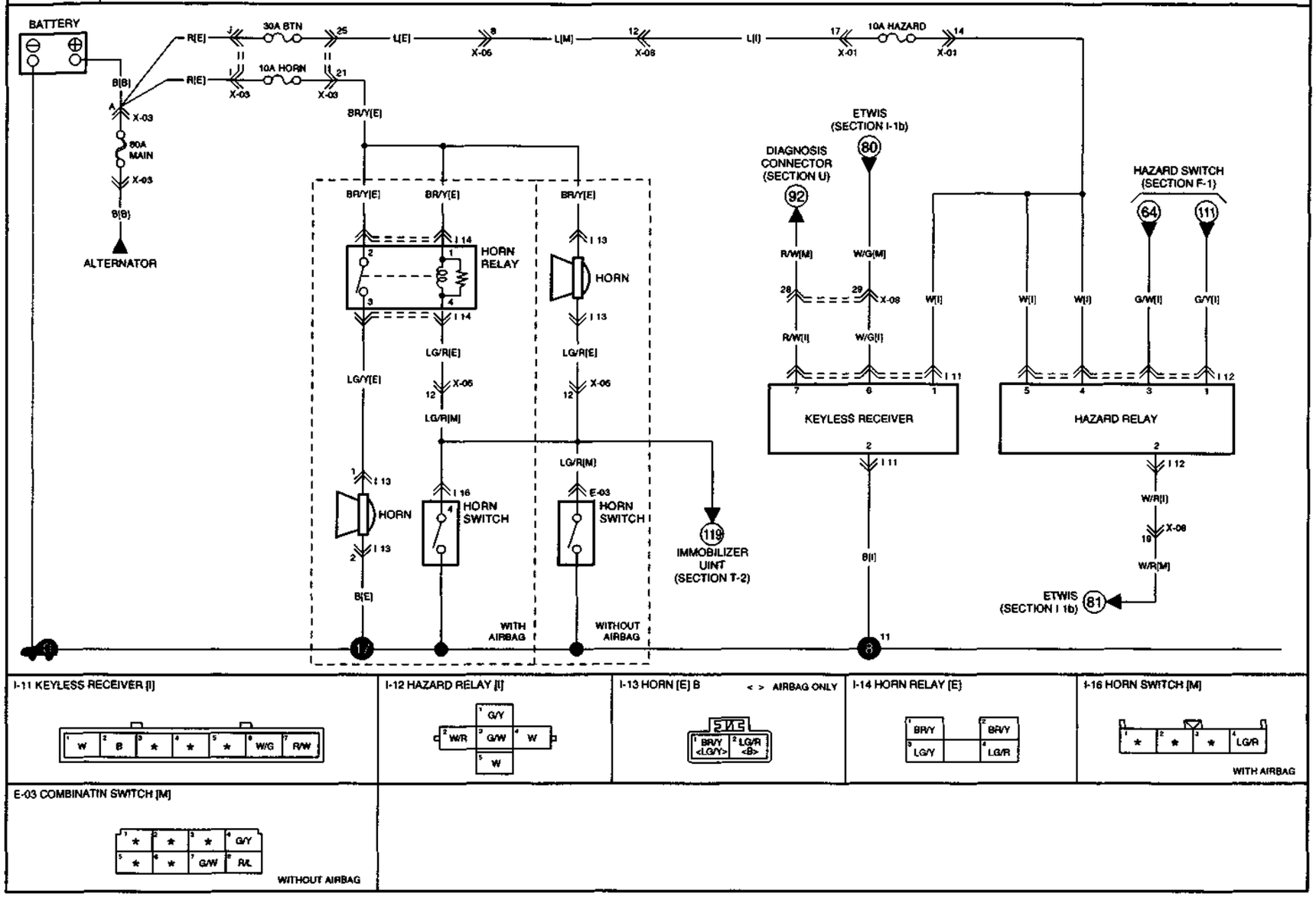

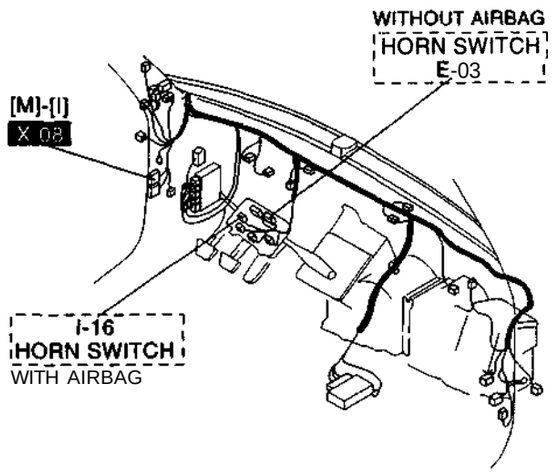
WITHOUT AIRBAG
HORN SWITCH
E-03
[M]-[I]
X-08
I-16
HORN SWITCH
WITH AIRBAG

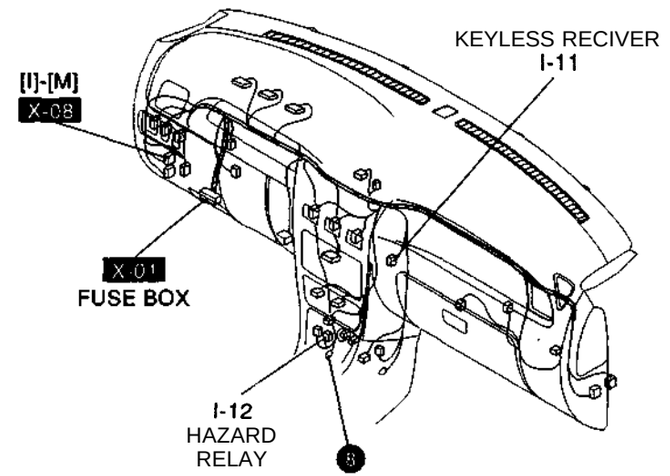
KEYLESS RECIVER
I-11
[I]-[M]
X-08
X-01
FUSE BOX
I-12
HAZARD
RELAY
8

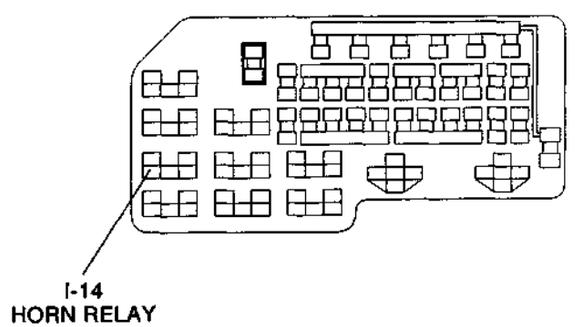
I-14
HORN RELAY

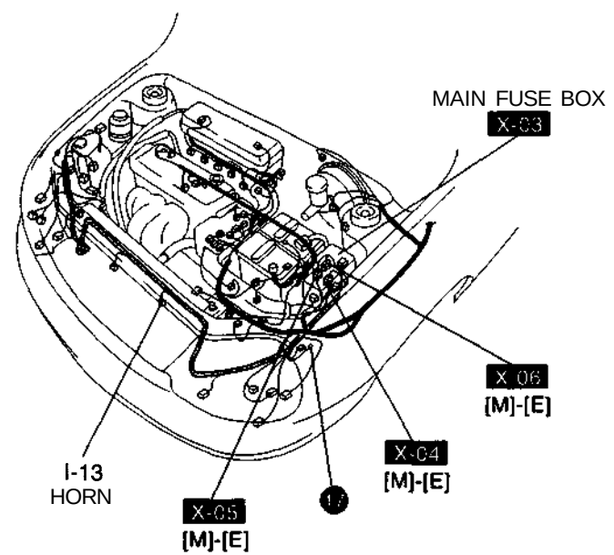
MAIN FUSE BOX
X-03
X-06
[M]-[E]
X-04
[M]-[E]
I-13
HORN
X-05
[M]-[E]
17

I-3 ILLUMINATION LAMP

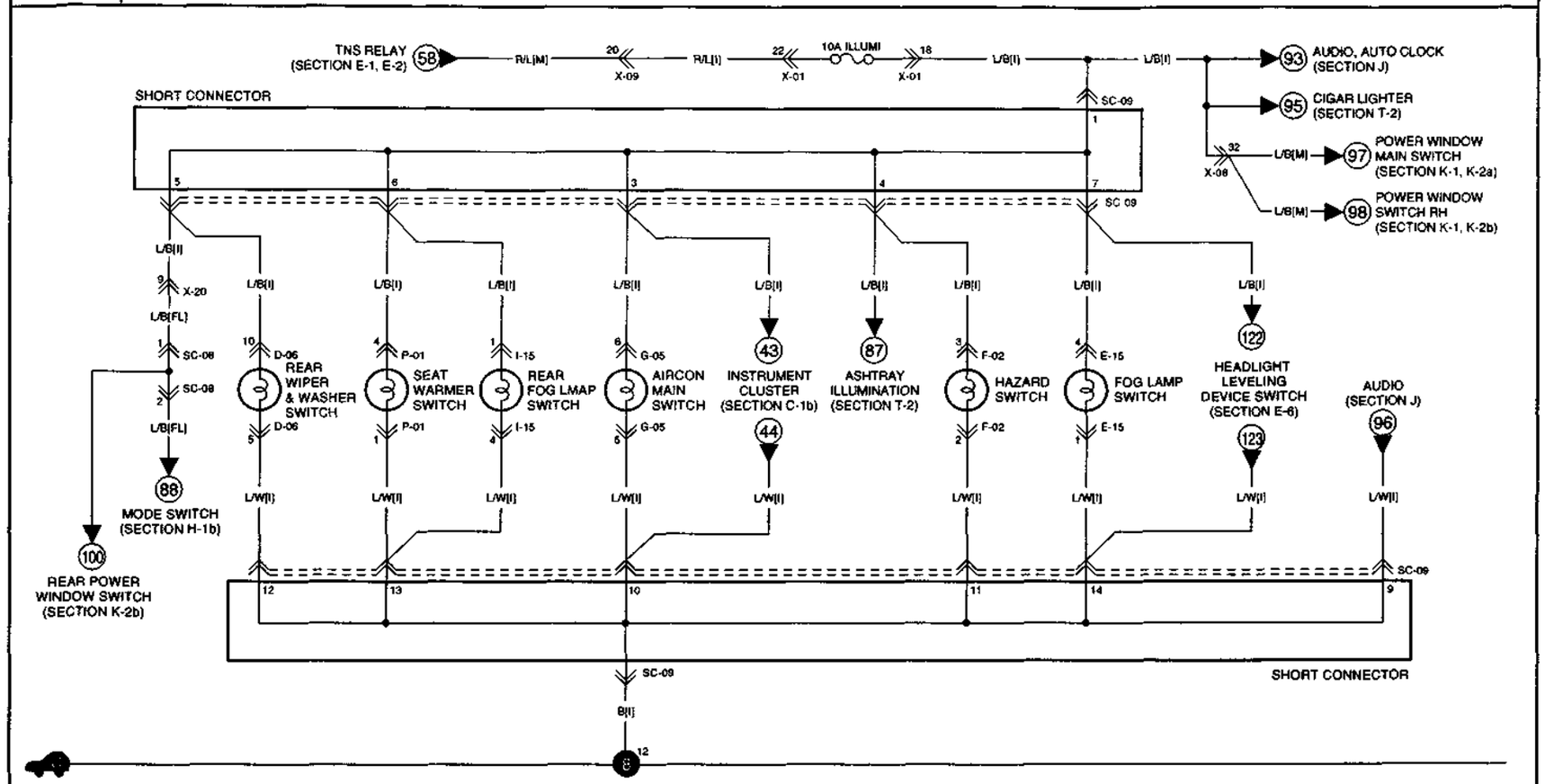

D-06 REAR WIPER & WASHER SWITCH [I]

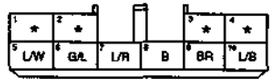

E-15 FRONT FOG LAMP SWITCH [I] G

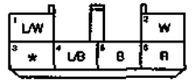

F-02 HAZARD SWITCH [I]

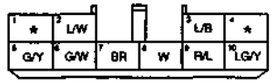

G-05 AIR CON MAIN SWITCH [I]

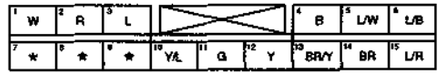

I-15 REAR FOG LAMP SWITCH [I]

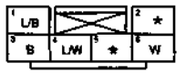

P-01 SEAT WARMER SWITCH [I]

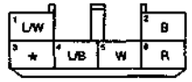

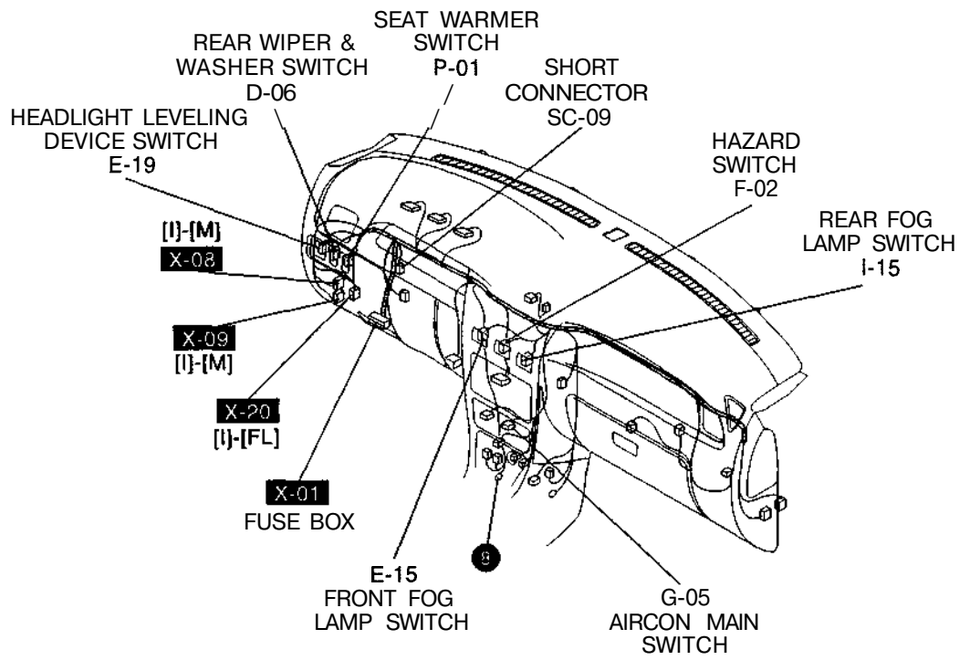
SEAT WARMER SWITCH P-01
REAR WIPER & WASHER SWITCH D-06
SHORT CONNECTOR SC-09
HEADLIGHT LEVELING DEVICE SWITCH E-19
HAZARD SWITCH F-02
REAR FOG LAMP SWITCH I-15
[I]-[M]
X-08
X-09
[I]-[M]
X-20
[I]-[FL]
X-01
FUSE BOX
E-15
FRONT FOG LAMP SWITCH
G-05
AIRCON MAIN SWITCH

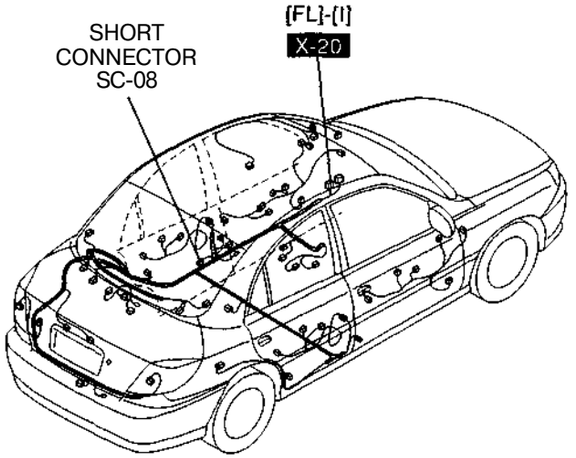
SHORT CONNECTOR SC-08
[FL]-[I]
X-20

J AUDIO SYSTEM

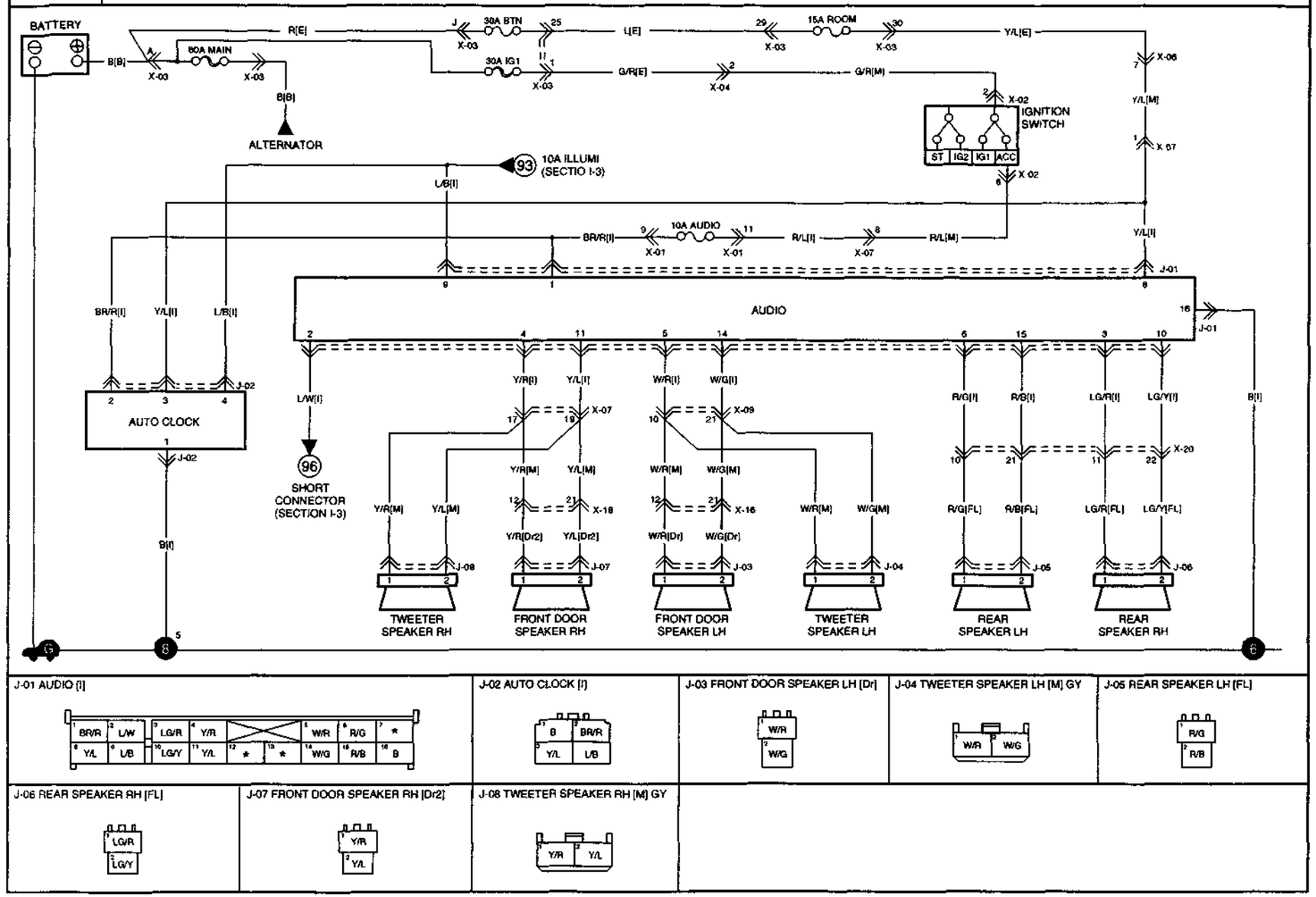

J-01 AUDIO [I]

J-02 AUTO CLOCK [I]

J-03 FRONT DOOR SPEAKER LH [Dr]

J-04 TWEETER SPEAKER LH [M] GY

J-05 REAR SPEAKER LH [FL]

J-06 REAR SPEAKER RH [FL]

J-07 FRONT DOOR SPEAKER RH [Dr2]

J-08 TWEETER SPEAKER RH [M] GY

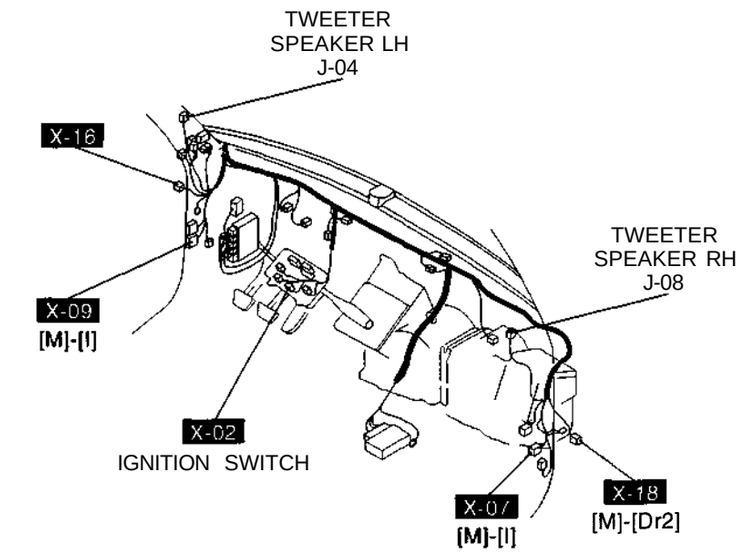
TWEETER
SPEAKER LH
J-04
X-16
X-09
[M]-[I]
X-02
IGNITION SWITCH
X-07
[M]-[I]
X-18
[M]-[Dr2]
TWEETER
SPEAKER RH
J-08

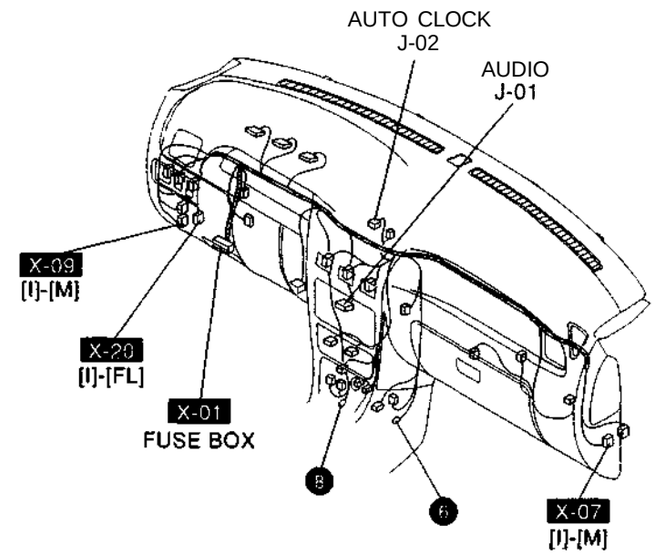
AUTO CLOCK
J-02
AUDIO
J-01
X-09
[I]-[M]
X-20
[I]-[FL]
X-01
FUSE BOX
8
6
X-07
[I]-[M]

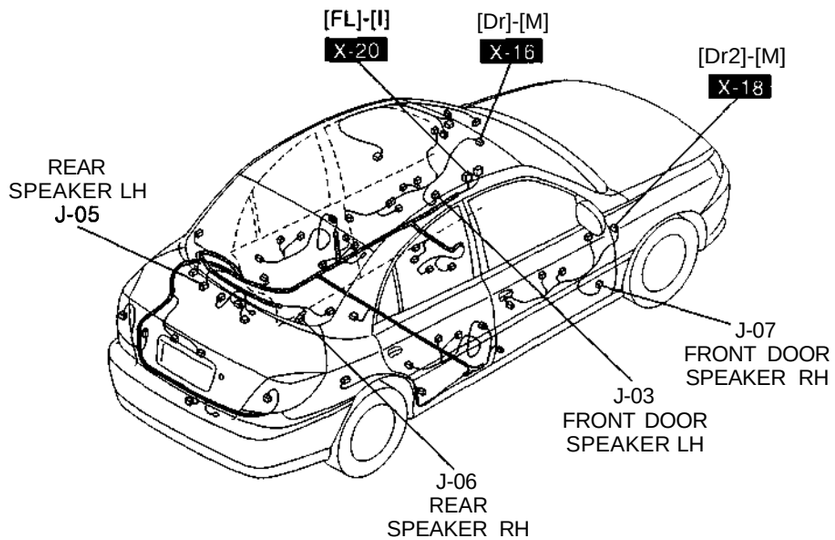
[FL]-[I]
X-20
[Dr]-[M]
X-16
[Dr2]-[M]
X-18
REAR
SPEAKER LH
J-05
J-07
FRONT DOOR
SPEAKER RH
J-03
FRONT DOOR
SPEAKER LH
J-06
REAR
SPEAKER RH

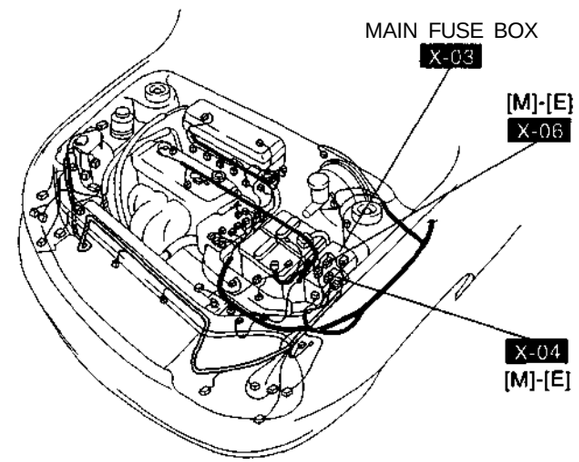
MAIN FUSE BOX
X-03
[M]-[E]
X-06
X-04
[M]-[E]

K-1 POWER WINDOW SYSTEM (2BUTTON)

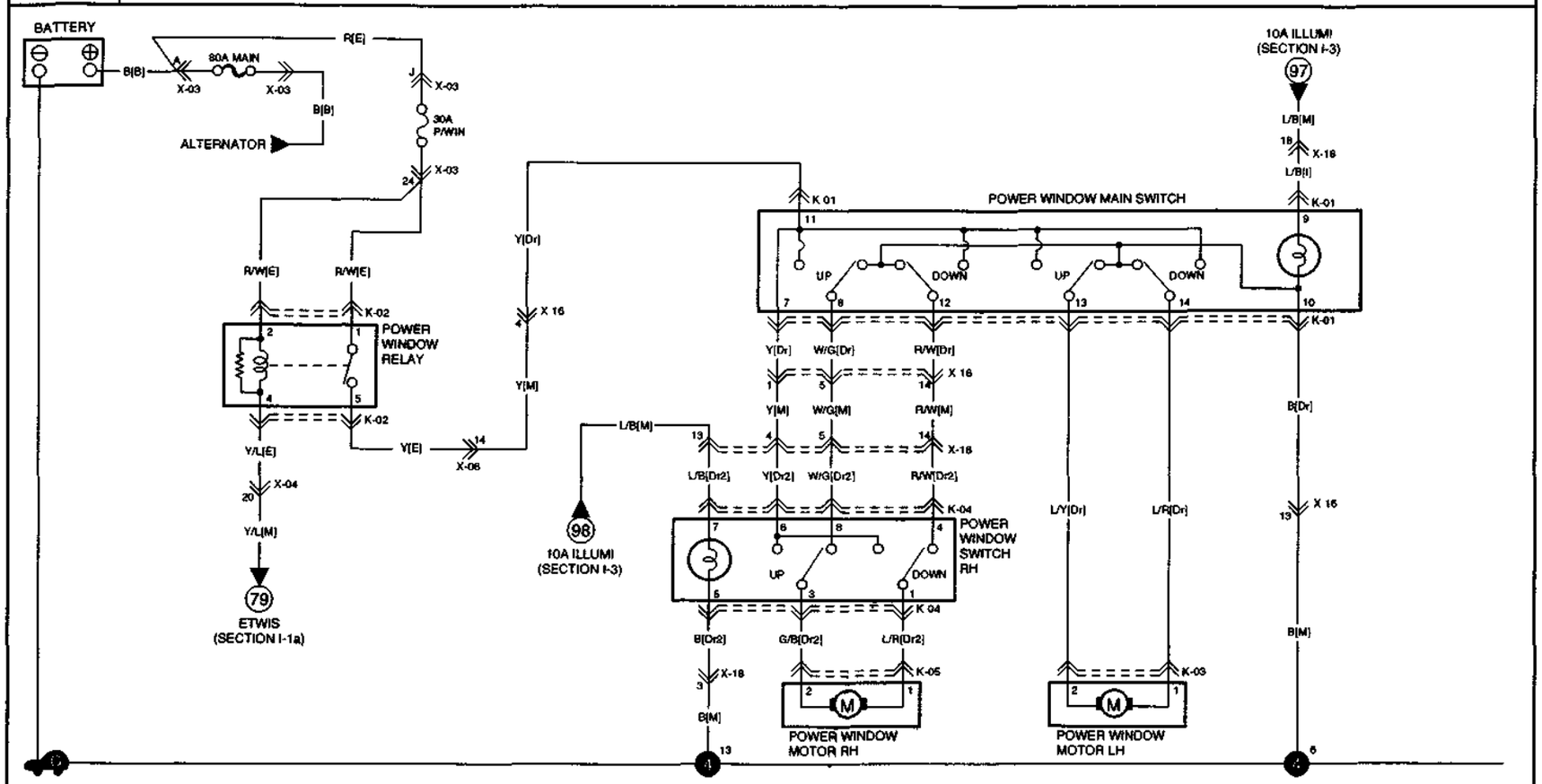

K-01 POWER WINDOW MAIN SWITCH [Dr]

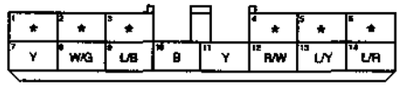

K-02 POWER WINDOW RELAY [E]

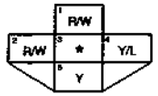

K-03 POWER WINDOW MOTOR LH [Dr] B

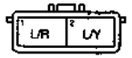

K-04 POWER WINDOW SWITCH RH [Dr2]

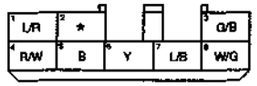

K-05 POWER WINDOW MOTOR RH [Dr2] B

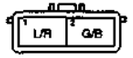

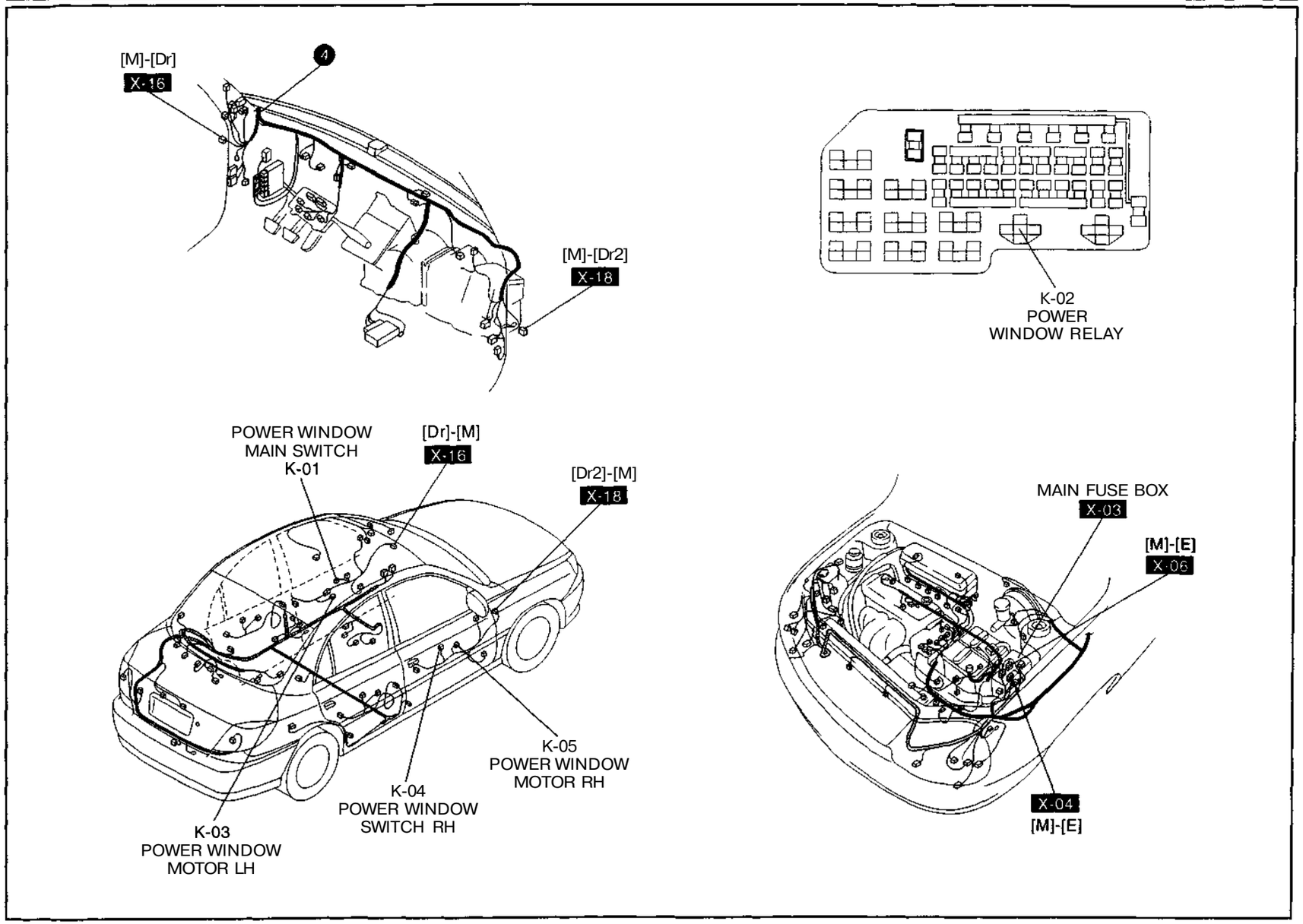
[M]-[Dr]
X-16
4
[M]-[Dr2]
X-18
K-02
POWER
WINDOW RELAY
POWER WINDOW
MAIN SWITCH
K-01
[Dr]-[M]
X-16
[Dr2]-[M]
X-18
MAIN FUSE BOX
X-03
[M]-[E]
X-06
K-05
POWER WINDOW
MOTOR RH
K-04
POWER WINDOW
SWITCH RH
K-03
POWER WINDOW
MOTOR LH
X-04
[M]-[E]

K-2a POWER WINDOW SYSTEM (4BUTTON)

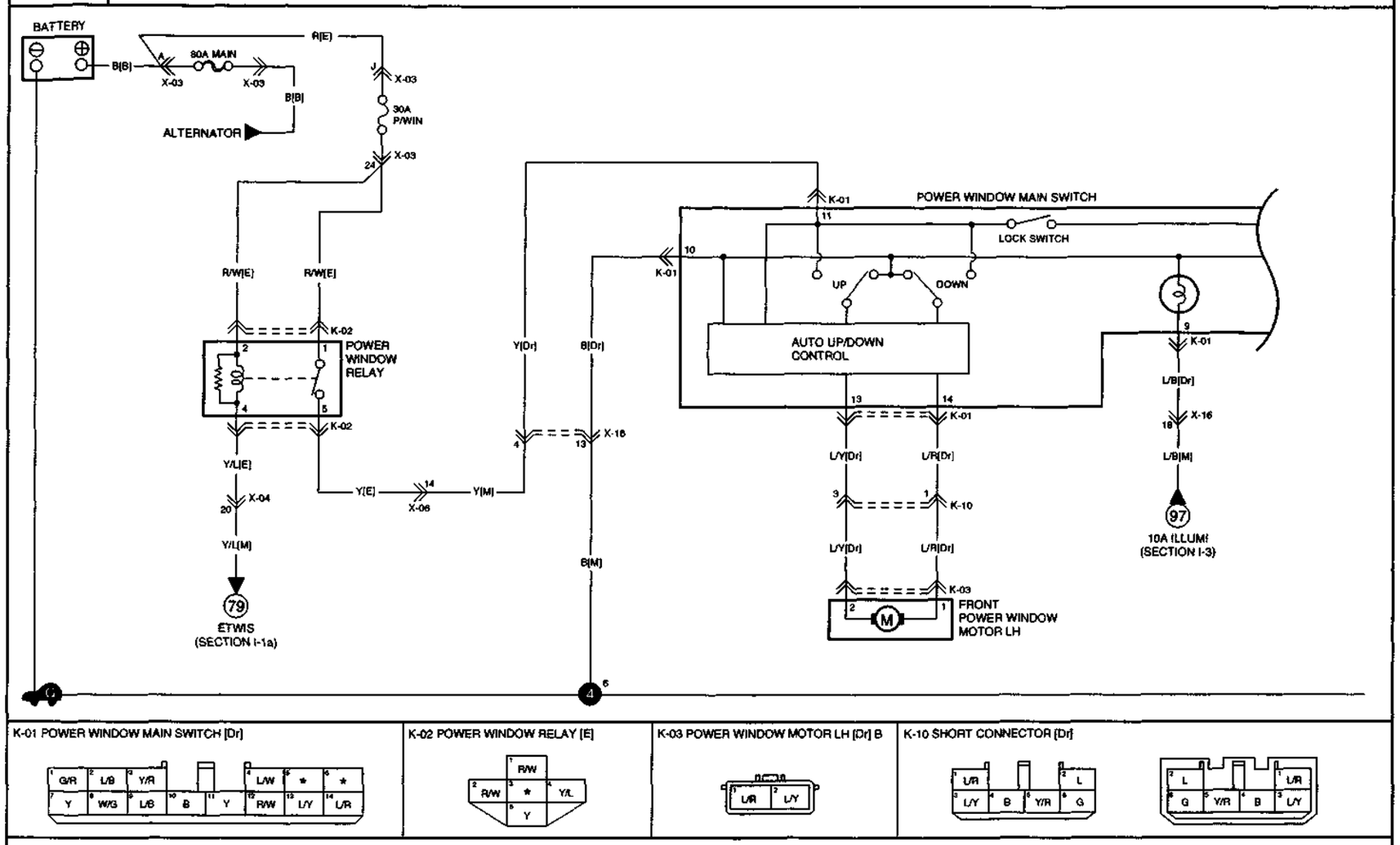

K-01 POWER WINDOW MAIN SWITCH [Dr]

K-02 POWER WINDOW RELAY [E]

K-03 POWER WINDOW MOTOR LH [Dr] B

K-10 SHORT CONNECTOR [Dr]

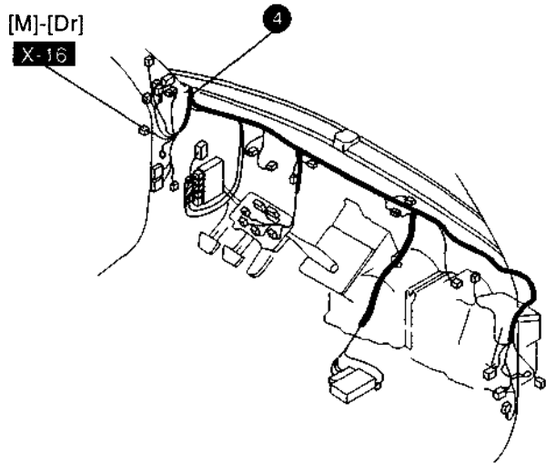
[M]-[Dr]
X-16
4

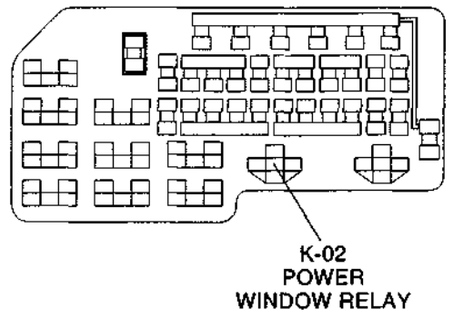
K-02
POWER
WINDOW RELAY

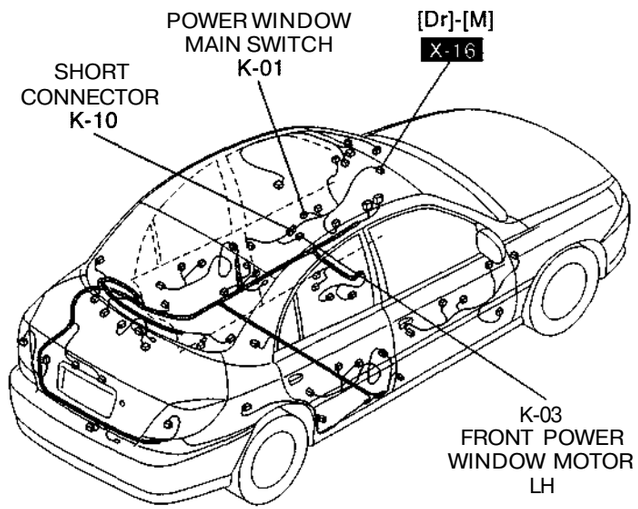
POWER WINDOW
MAIN SWITCH
K-01
[Dr]-[M]
X-16
SHORT
CONNECTOR
K-10
K-03
FRONT POWER
WINDOW MOTOR
LH

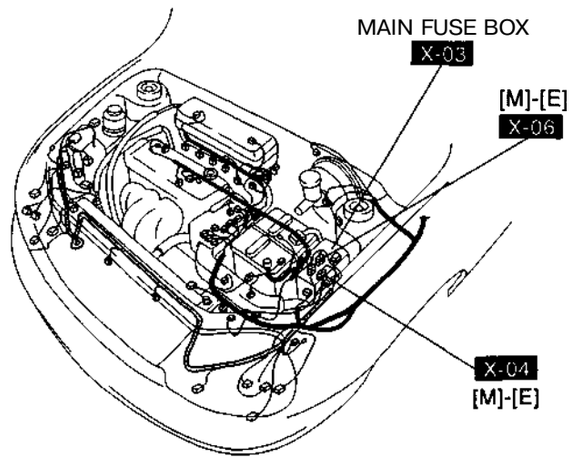
MAIN FUSE BOX
X-03
[M]-[E]
X-06
X-04
[M]-[E]

K-2b POWER WINDOW SYSTEM (4BUTTON)

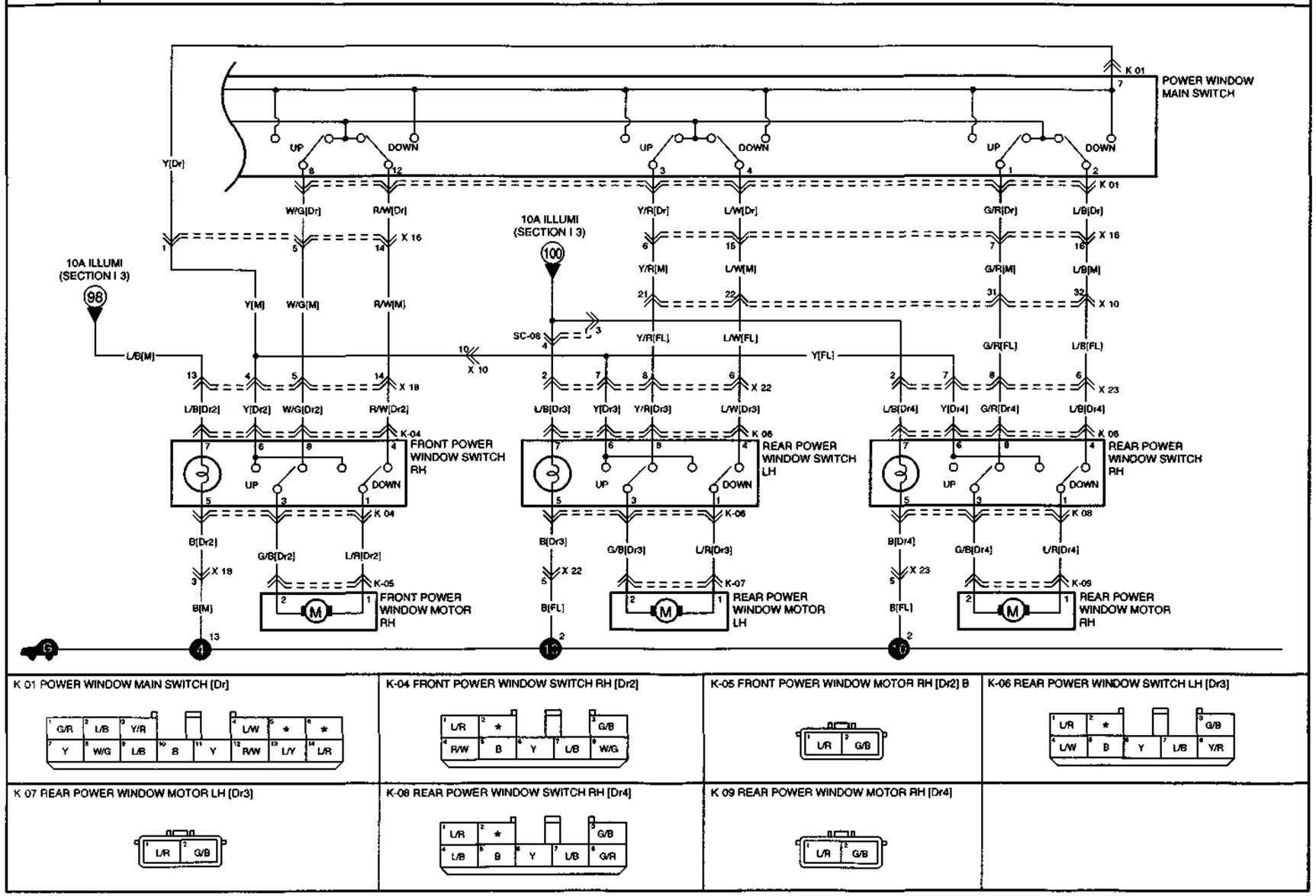

K 01 POWER WINDOW MAIN SWITCH [Dr]

K-04 FRONT POWER WINDOW SWITCH RH [Dr2]

K-05 FRONT POWER WINDOW MOTOR RH [Dr2] B

K-06 REAR POWER WINDOW SWITCH LH [Dr3]

K 07 REAR POWER WINDOW MOTOR LH [Dr3]

K-08 REAR POWER WINDOW SWITCH RH [Dr4]

K 09 REAR POWER WINDOW MOTOR RH [Dr4]

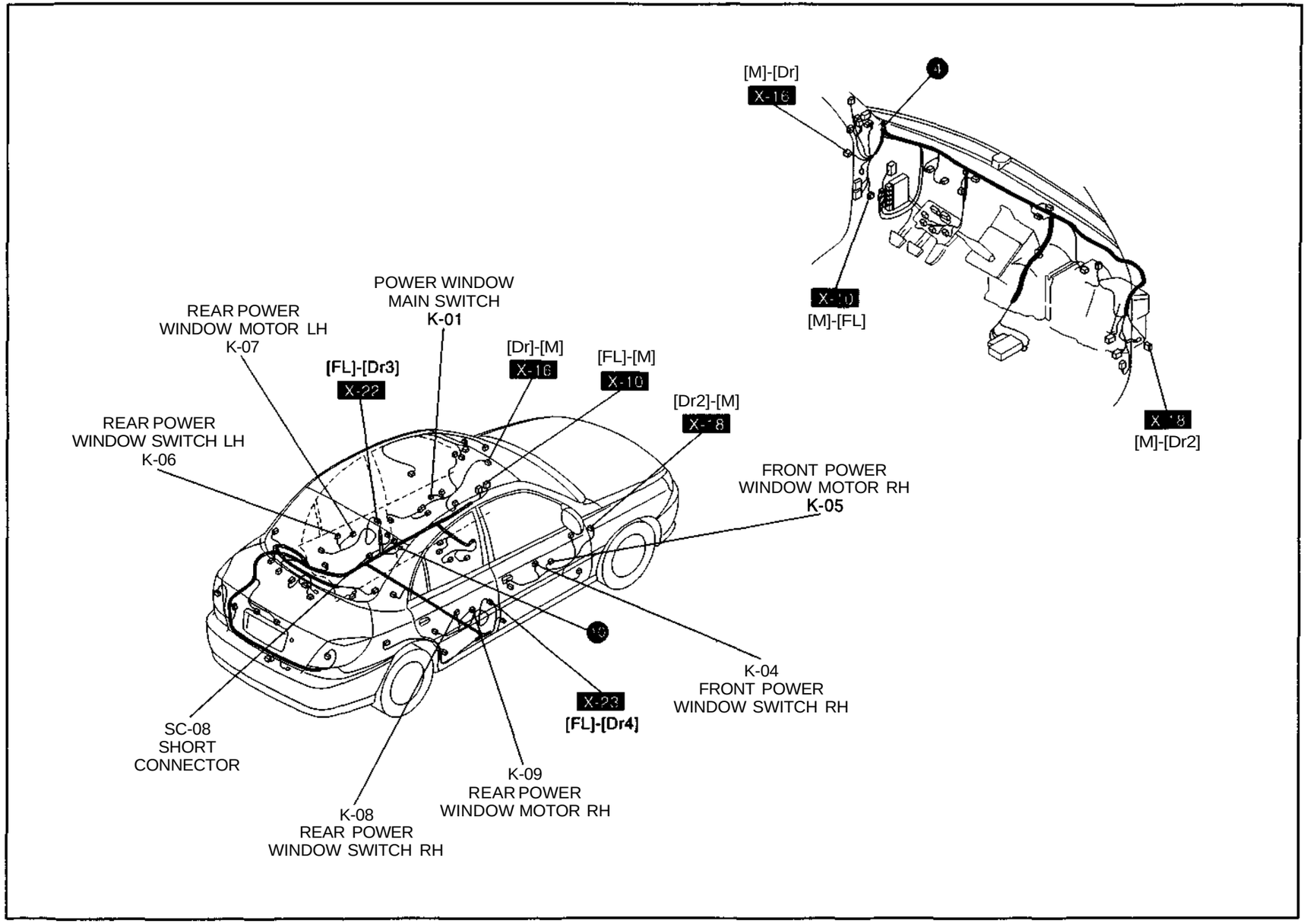
[M]-[Dr]
X-16
[M]-[FL]
[M]-[Dr2]
POWER WINDOW
MAIN SWITCH
K-01
REAR POWER
WINDOW MOTOR LH
K-07
[FL]-[Dr3]
X-22
[Dr]-[M]
X-16
[FL]-[M]
X-10
[Dr2]-[M]
REAR POWER
WINDOW SWITCH LH
K-06
FRONT POWER
WINDOW MOTOR RH
K-05
K-04
FRONT POWER
WINDOW SWITCH RH
X-23
[FL]-[Dr4]
SC-08
SHORT
CONNECTOR
K-09
REAR POWER
WINDOW MOTOR RH
K-08
REAR POWER
WINDOW SWITCH RH

K-3 POWER DOOR LOCK SYSTEM

( ) 2BUTTON P/W

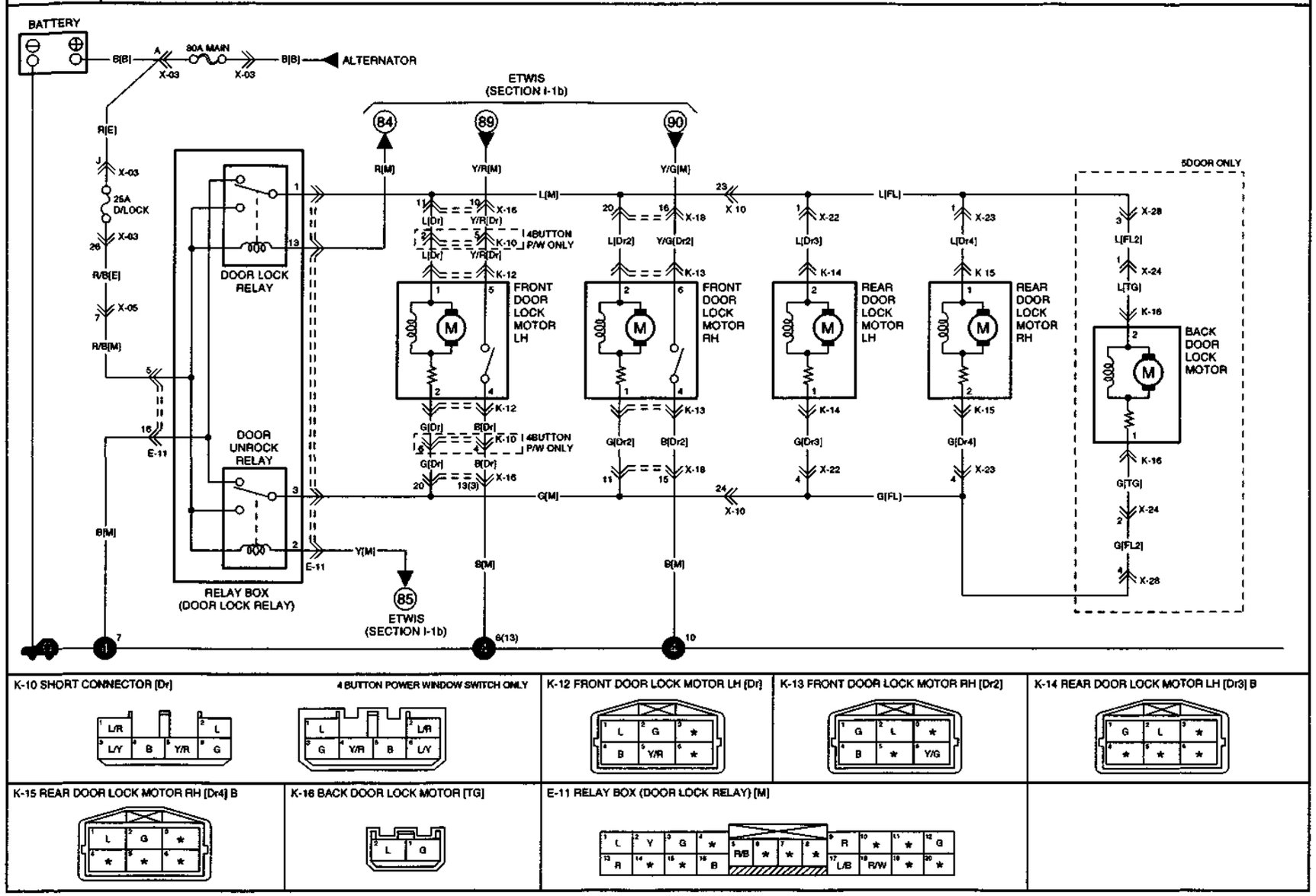

K-10 SHORT CONNECTOR [Dr]

4 BUTTON POWER WINDOW SWITCH ONLY

K-12 FRONT DOOR LOCK MOTOR LH [Dr]

K-13 FRONT DOOR LOCK MOTOR RH [Dr2]

K-14 REAR DOOR LOCK MOTOR LH [Dr3] B

K-15 REAR DOOR LOCK MOTOR RH [Dr4] B

K-16 BACK DOOR LOCK MOTOR [TG]

E-11 RELAY BOX (DOOR LOCK RELAY) [M]

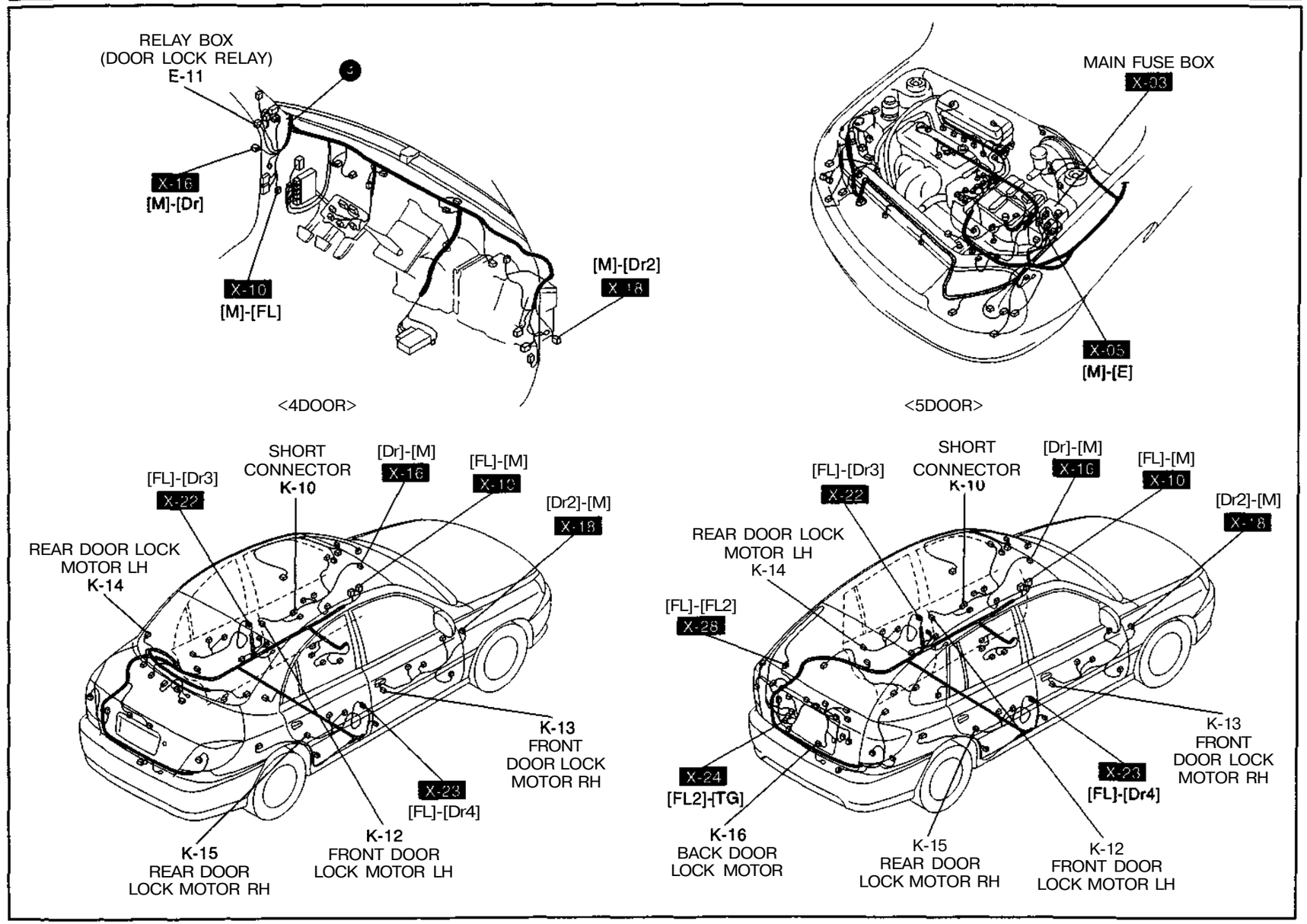
RELAY BOX
(DOOR LOCK RELAY)
E-11
X-16
[M]-[Dr]
X-10
[M]-[FL]
[M]-[Dr2]
X-18
<4DOOR>
MAIN FUSE BOX
X-03
X-05
[M]-[E]
<5DOOR>
SHORT
CONNECTOR
K-10
[FL]-[Dr3]
X-22
[Dr]-[M]
X-16
[FL]-[M]
X-10
[Dr2]-[M]
X-18
REAR DOOR LOCK
MOTOR LH
K-14
K-13
FRONT
DOOR LOCK
MOTOR RH
X-23
[FL]-[Dr4]
K-12
FRONT DOOR
LOCK MOTOR LH
K-15
REAR DOOR
LOCK MOTOR RH
[FL]-[FL2]
X-28
X-24
[FL2]-[TG]
K-16
BACK DOOR
LOCK MOTOR
K-15
REAR DOOR
LOCK MOTOR RH
K-12
FRONT DOOR
LOCK MOTOR LH

L POWER MIRROR SYSTEM

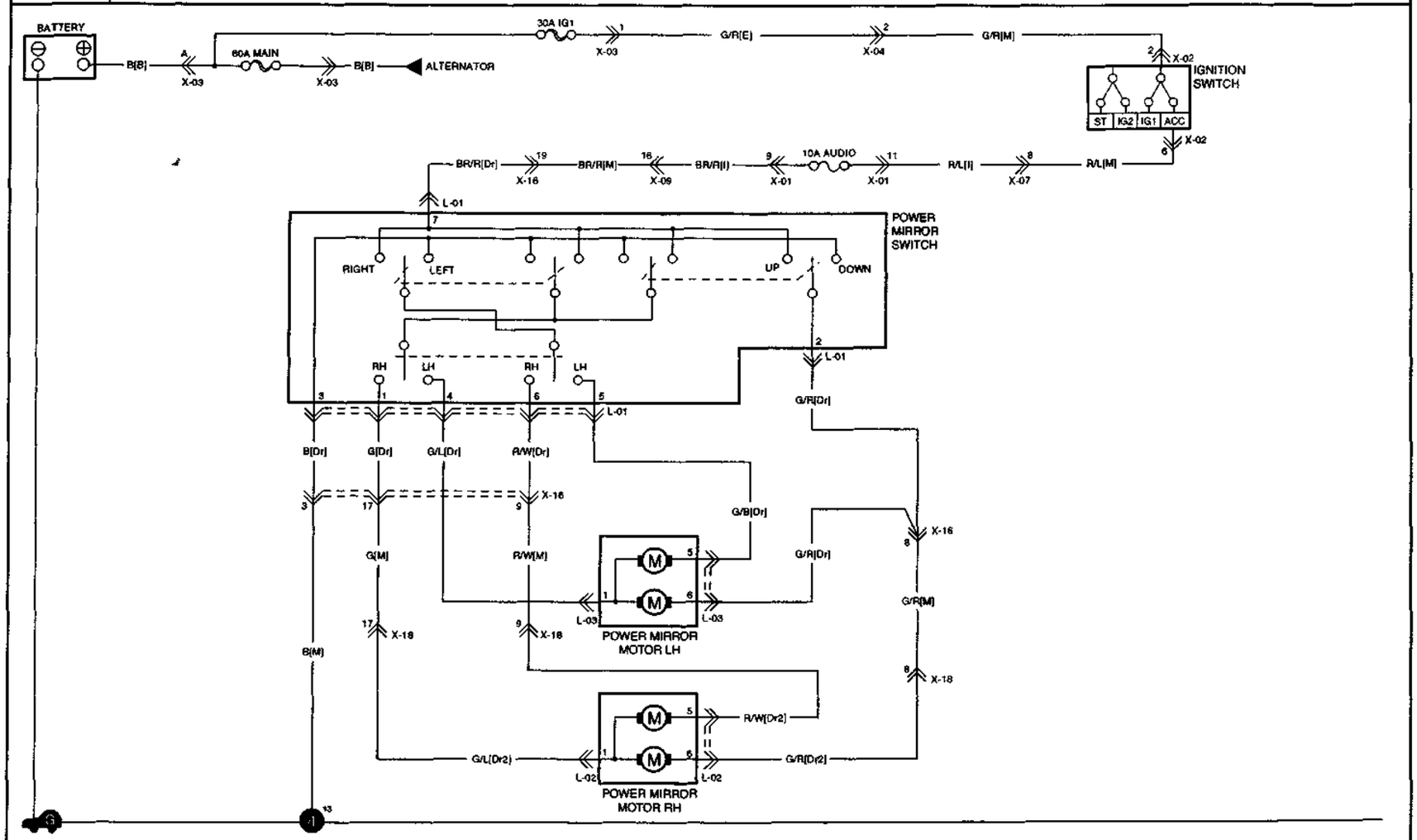

L-01 POWER MIRROR SWITCH [Dr]

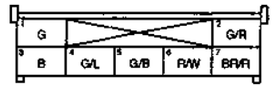

L-02 POWER MIRROR MOTOR RH [Dr2]

L-02 POWER MIRROR MOTOR LH [Dr]

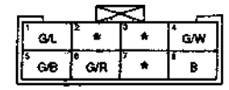

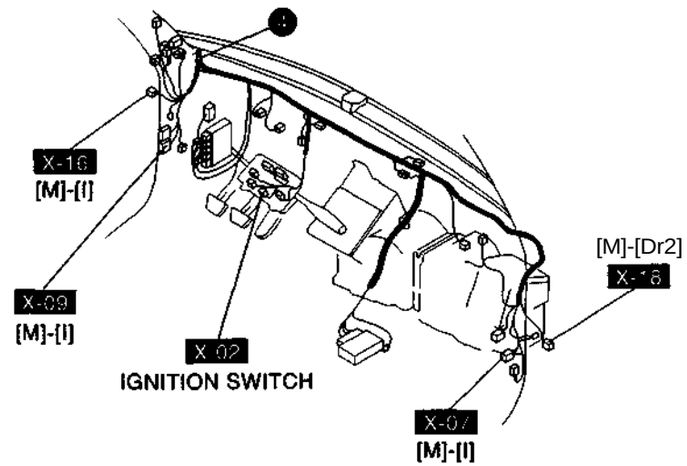
X-16
[M]-[I]
X-09
[M]-[I]
X-02
IGNITION SWITCH
X-07
[M]-[I]
[M]-[Dr2]
X-18

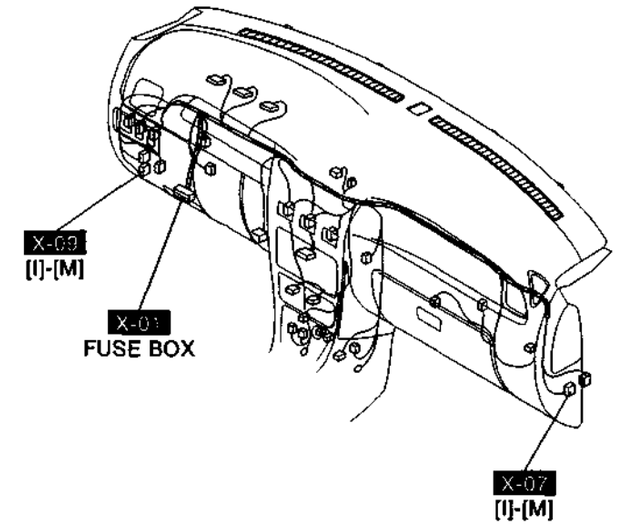
X-09
[I]-[M]
X-01
FUSE BOX
X-07
[I]-[M]

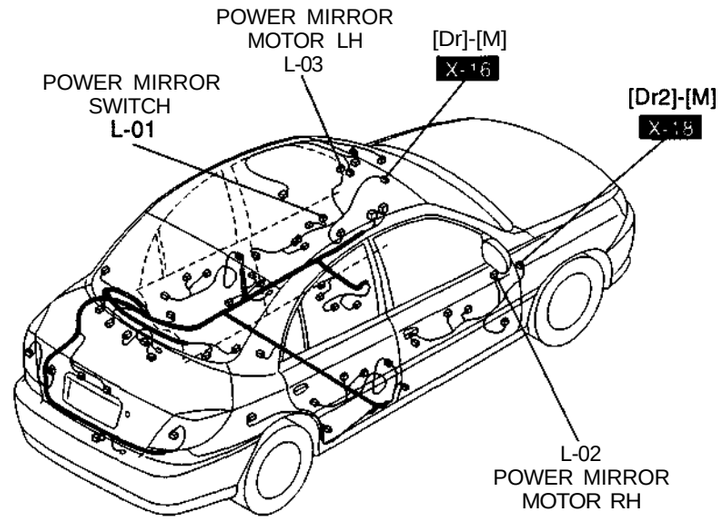
POWER MIRROR
MOTOR LH
L-03
[Dr]-[M]
X-16
POWER MIRROR
SWITCH
L-01
[Dr2]-[M]
X-18
L-02
POWER MIRROR
MOTOR RH

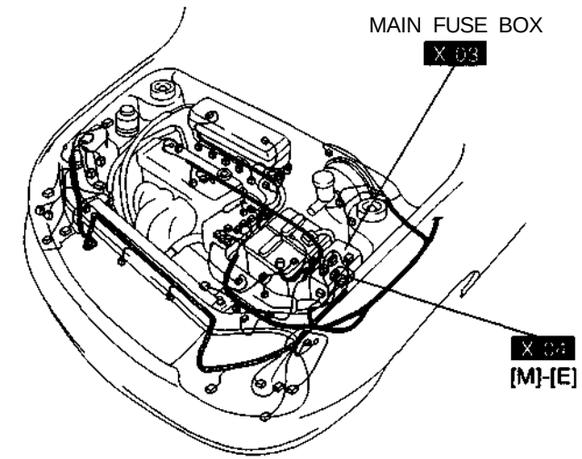
MAIN FUSE BOX
X-03
X-08
[M]-[E]

M ROOM LAMP, SUNROOF SYSTEM

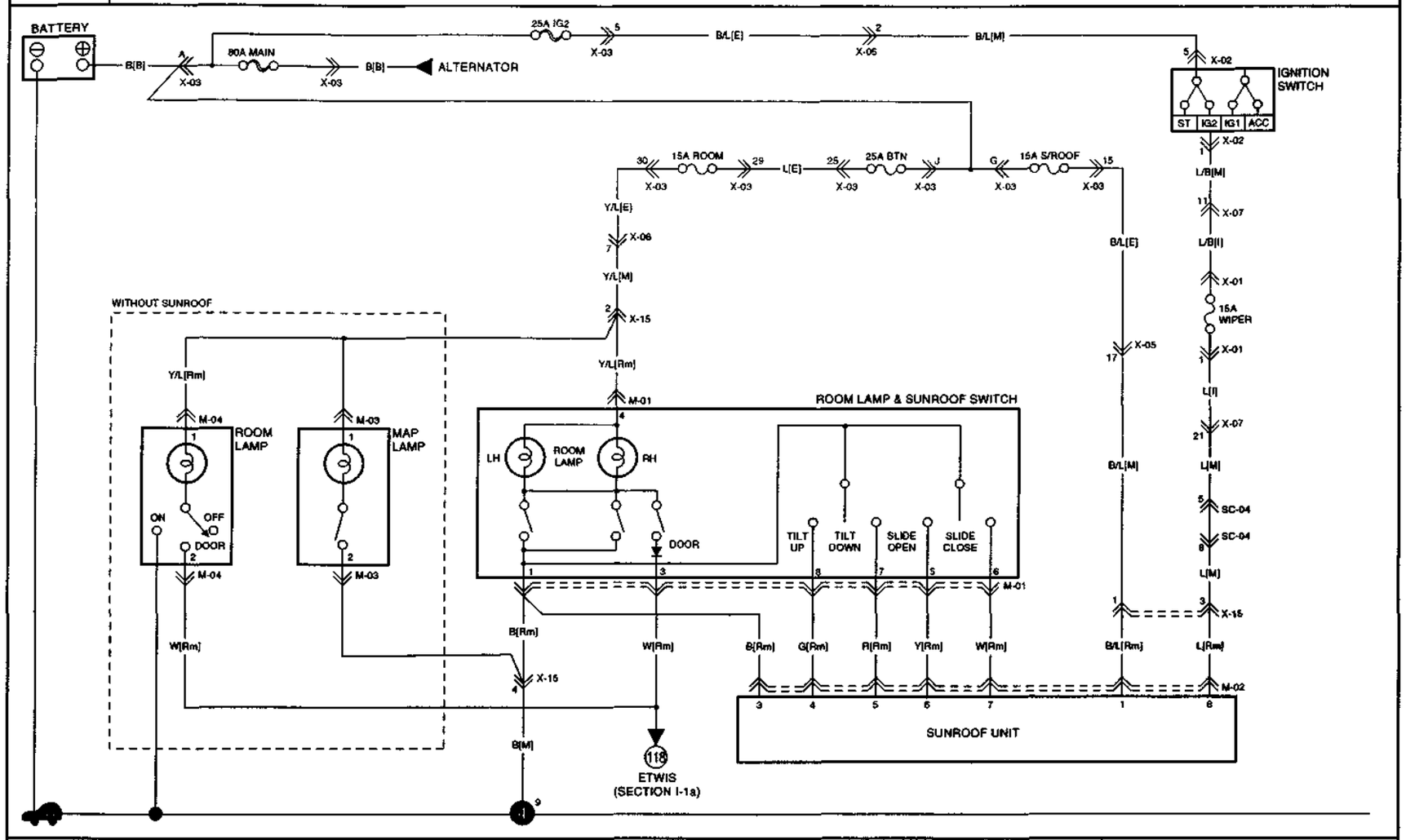

M-01 ROOM LAMP & SUNROOF SWITCH [Rm]

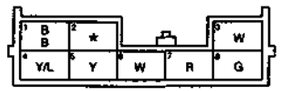

M-02 SUNROOF UNIT [Rm]

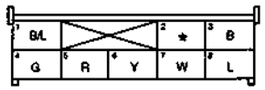

M-03 MAP LAMP [Rm]

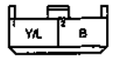

M-04 ROOM LAMP [Rm]

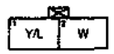

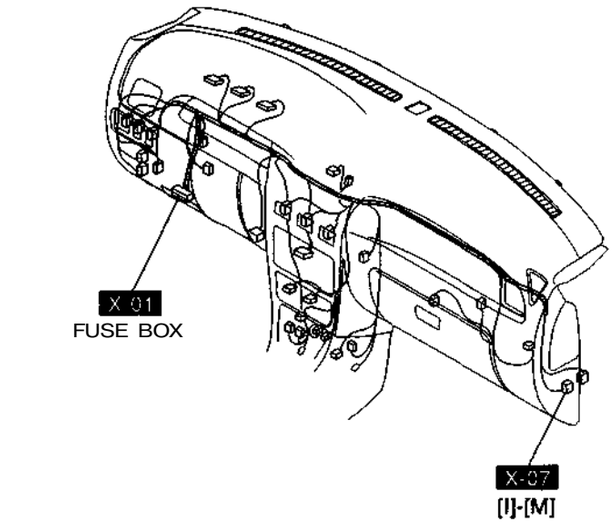
X-01
FUSE BOX
X-07
[I]-[M]

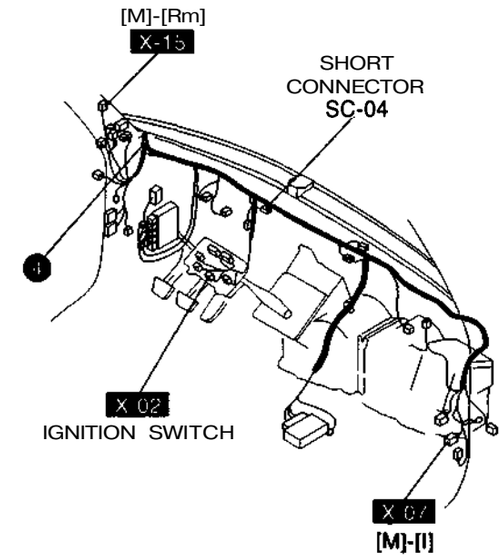
[M]-[Rm]
X-15
SHORT
CONNECTOR
SC-04
X-02
IGNITION SWITCH
X-07
[M]-[I]

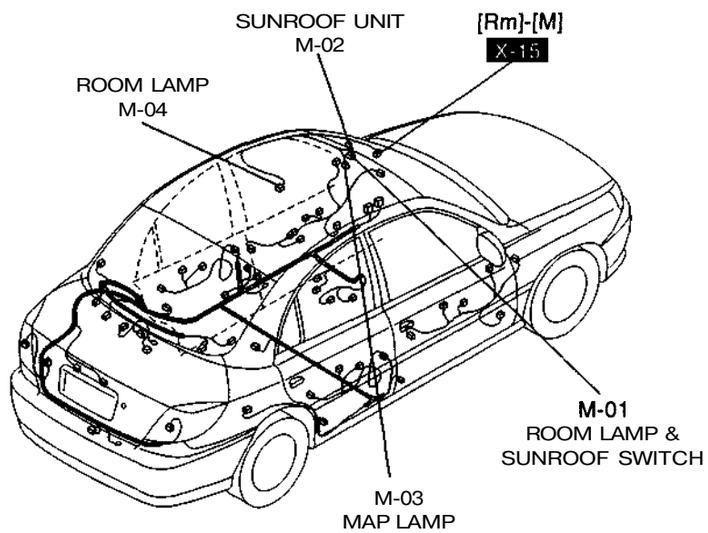
SUNROOF UNIT
M-02
[Rm]-[M]
X-15
ROOM LAMP
M-04
M-01
ROOM LAMP &
SUNROOF SWITCH
M-03
MAP LAMP

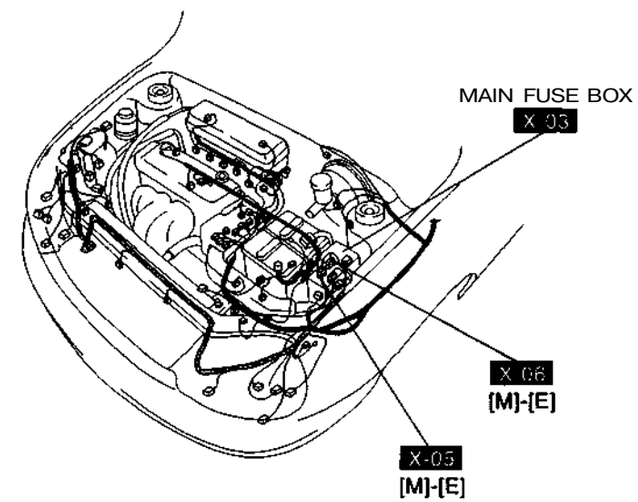
MAIN FUSE BOX
X-03
X-06
[M]-[E]
X-05
[M]-[E]

O ANTI-LOCK BRAKE SYSTEM (ABS)

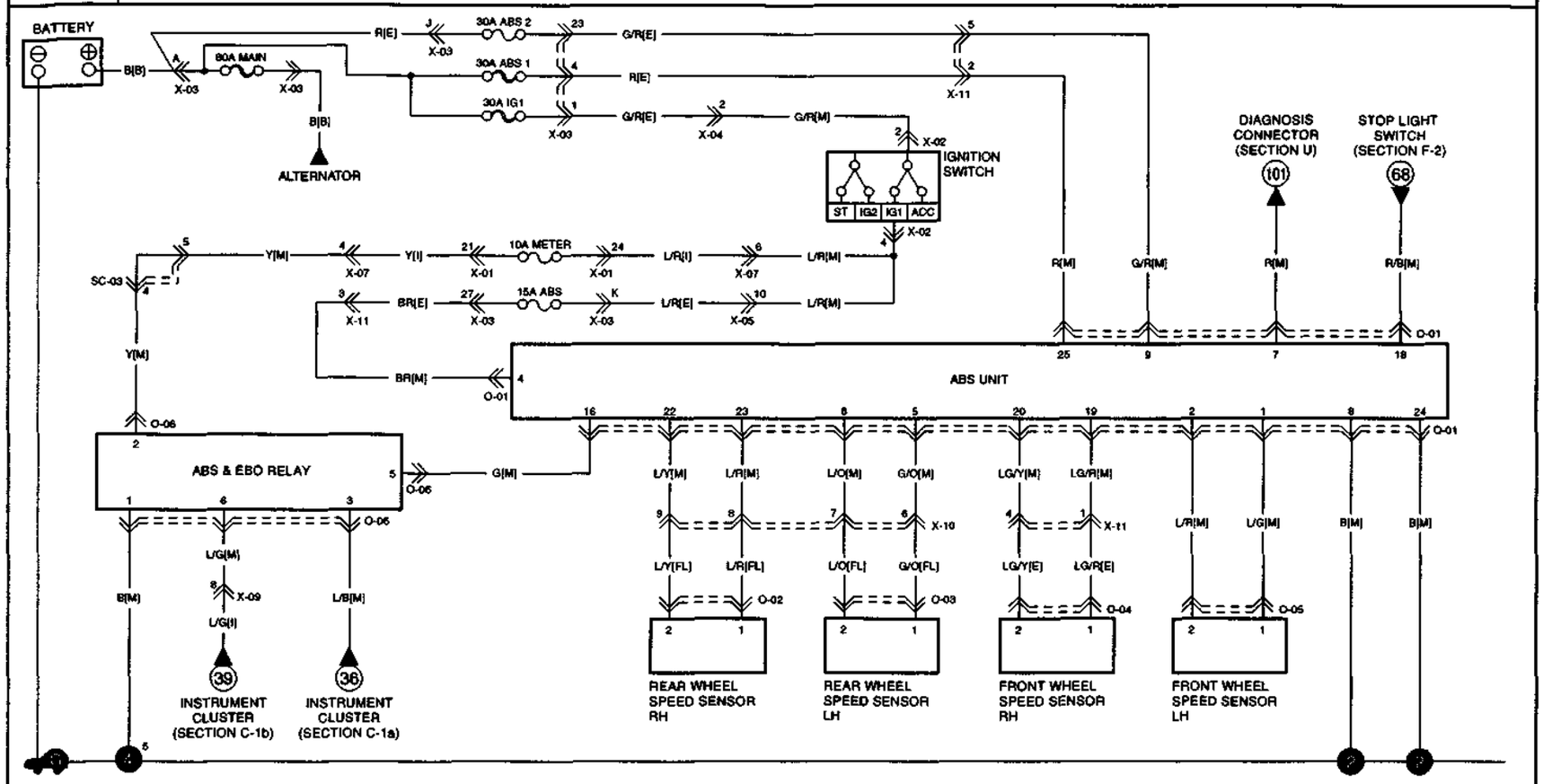

O-01 ABS UNIT [M]

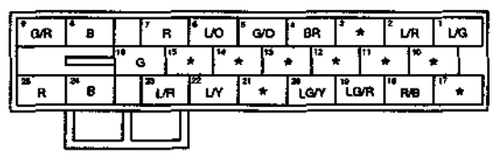

O-02 REAR WHEEL SPEED SENSOR RH [FL]

O-03 REAR WHEEL SPEED SENSOR LH [FL]

O-04 FRONT WHEEL SPEED SENSOR RH [E] B

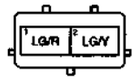

O-05 FRONT WHEEL SPEED SENSOR LH [M] B

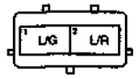

O-06 ABS & EBO RELAY [E] B

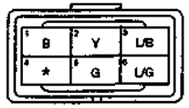

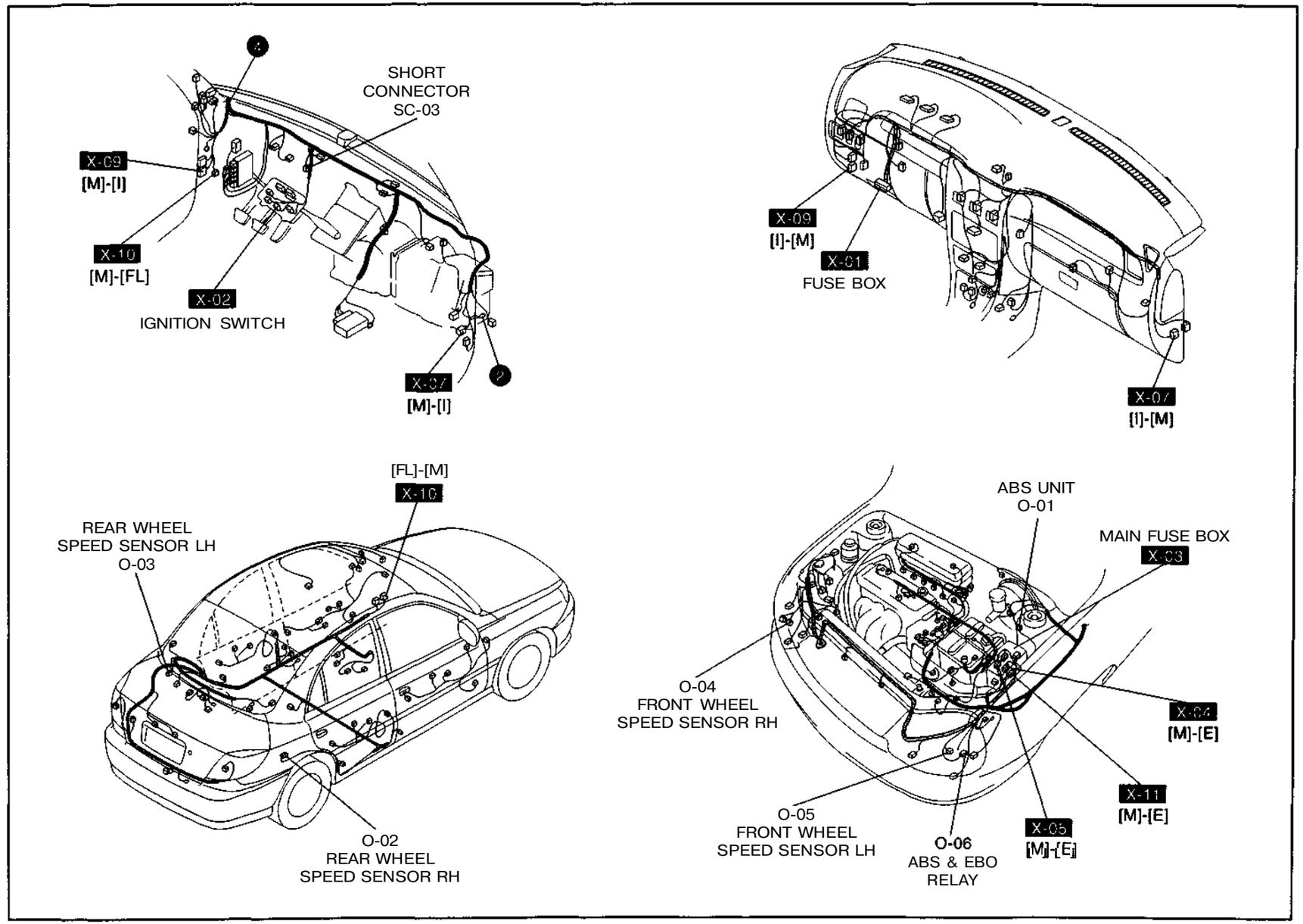
SHORT
CONNECTOR
SC-03
X-09
[M]-[I]
X-10
[M]-[FL]
X-02
IGNITION SWITCH
X-07
[M]-[I]
X-09
[I]-[M]
X-01
FUSE BOX
X-07
[I]-[M]
[FL]-[M]
X-10
REAR WHEEL
SPEED SENSOR LH
O-03
O-02
REAR WHEEL
SPEED SENSOR RH
ABS UNIT
O-01
MAIN FUSE BOX
X-03
O-04
FRONT WHEEL
SPEED SENSOR RH
X-04
[M]-[E]
X-11
[M]-[E]
O-05
FRONT WHEEL
SPEED SENSOR LH
O-06
ABS & EBO
RELAY
X-05
[M]-[E]

P SEAT WARMER SYSTEM

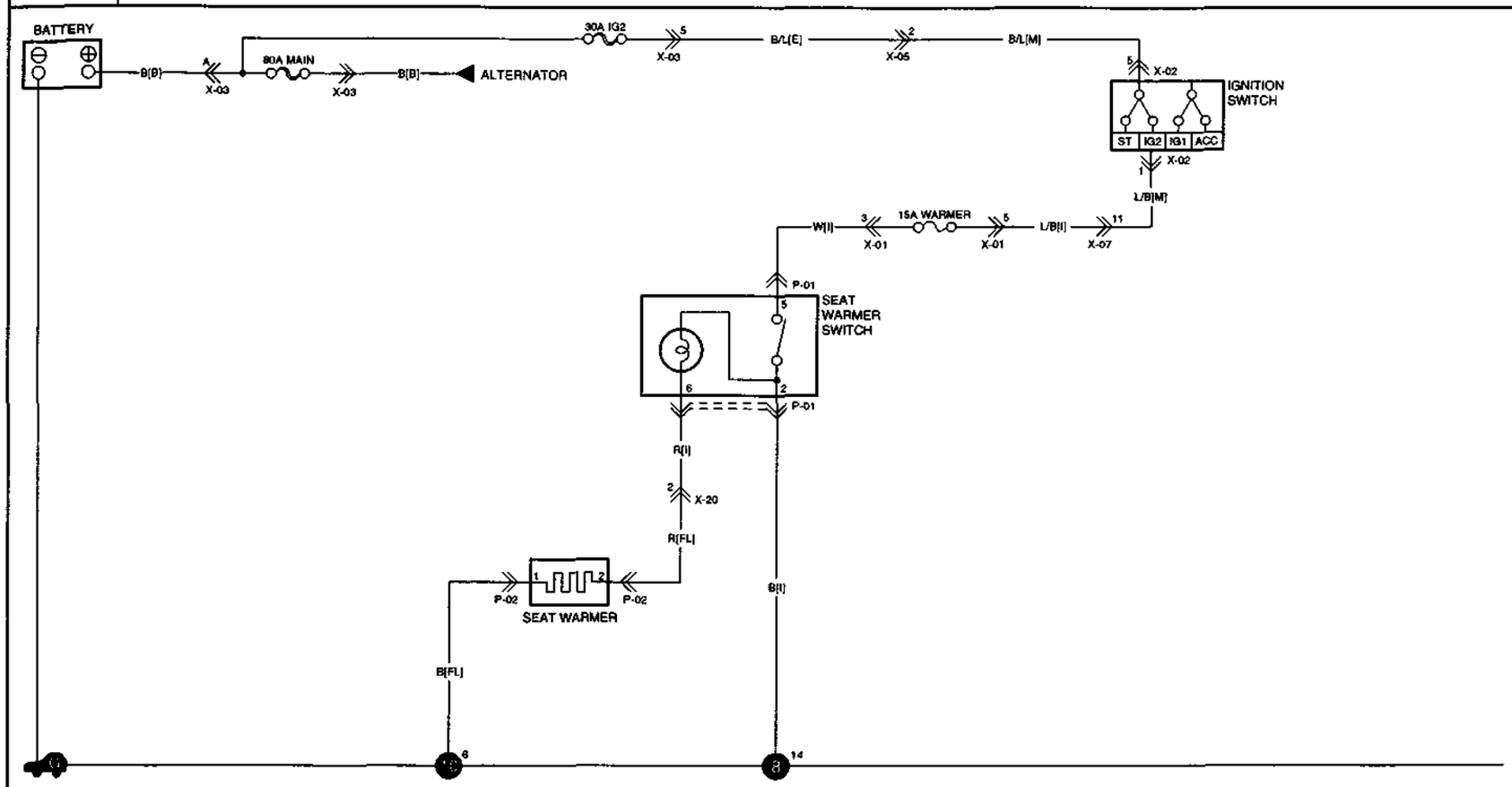

P-01 SEAT WARMER SWITCH [I]	P-02 SEAT WARMER [FL]
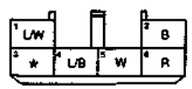	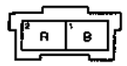

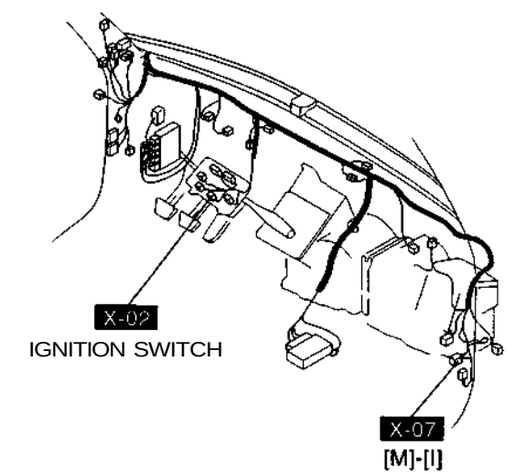
X-02
IGNITION SWITCH
X-07
[M]-[I]

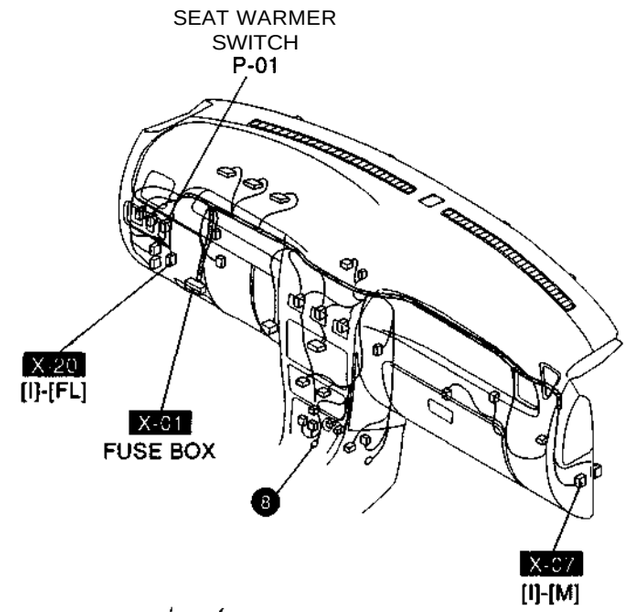
SEAT WARMER
SWITCH
P-01
X-20
[I]-[FL]
X-01
FUSE BOX
8
X-07
[I]-[M]

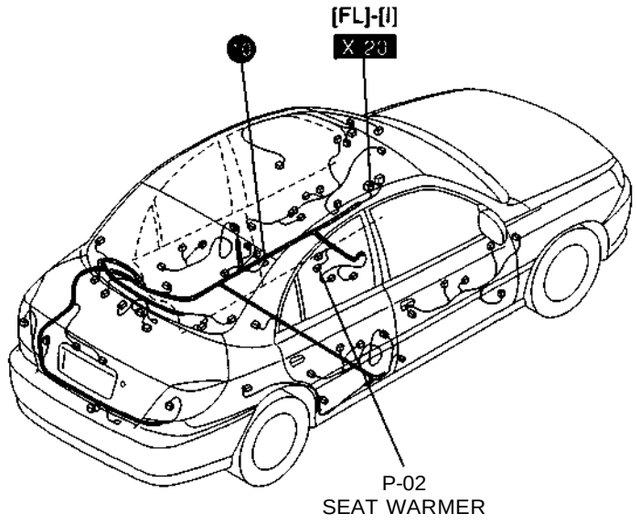
[FL]-[I]
X-23
P-02
SEAT WARMER

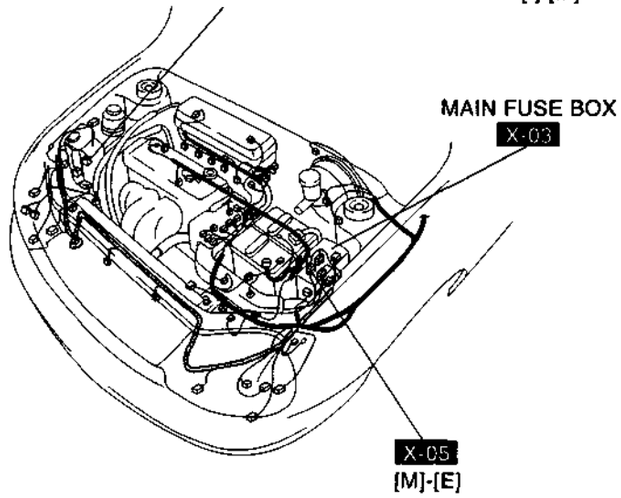
MAIN FUSE BOX
X-03
X-05
[M]-[E]

S-1 AIRBAG SYSTEM (WITHOUT SIDE AIRBAG)

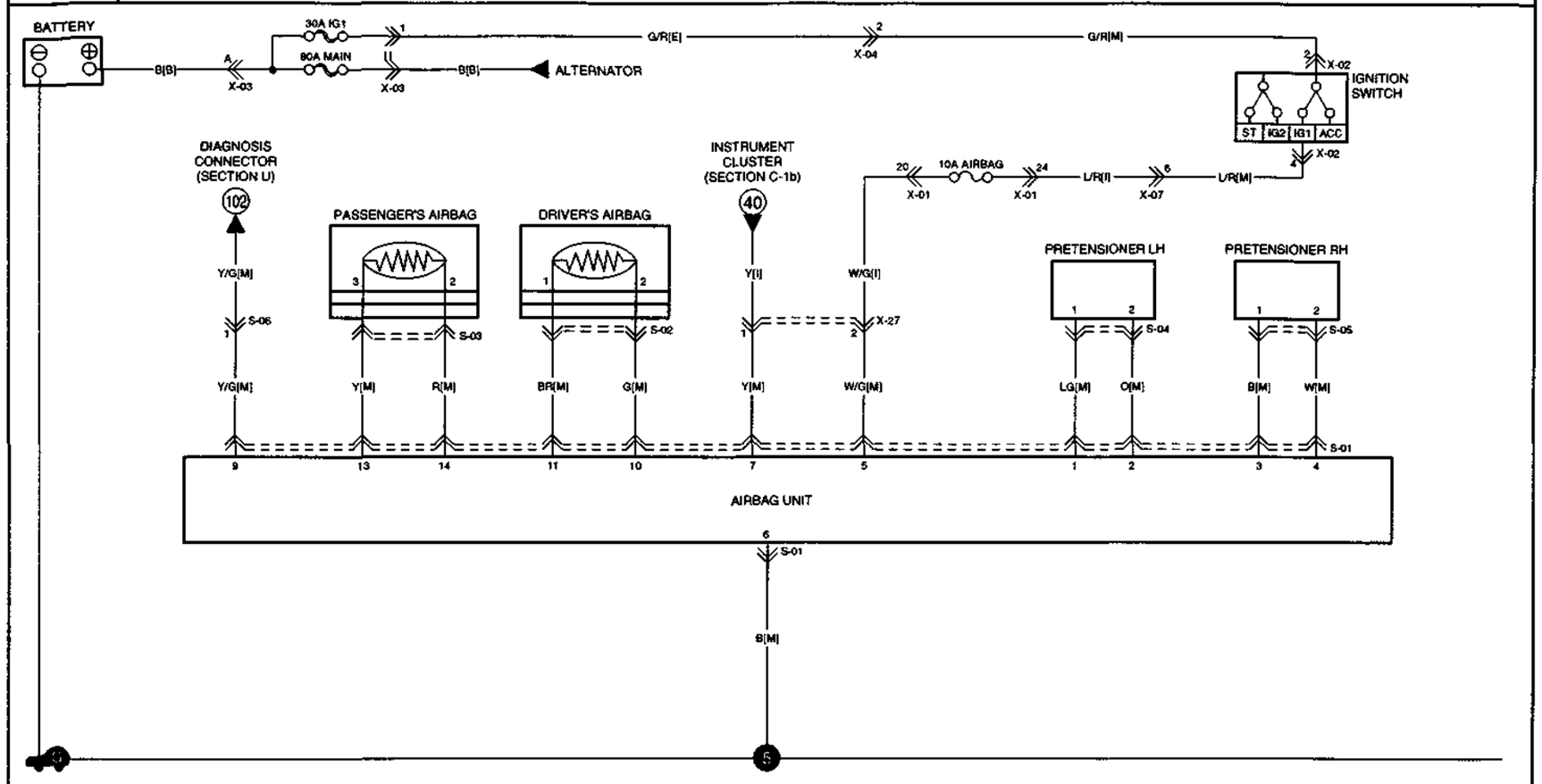

S-01 AIRBAG UNIT [M] Y

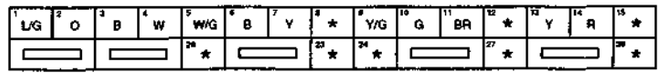

S-02 DRIVER'S AIRBAG [M]

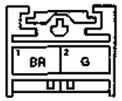

S-03 PASSENGER'S AIRBAG [M] L

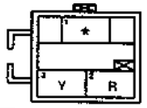

S-04 PRETENSIONER LH [M]

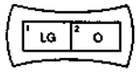

S-05 PRETENSIONER RH [M]

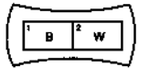

S-06 SHORT CONNECTOR [M]

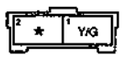

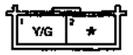

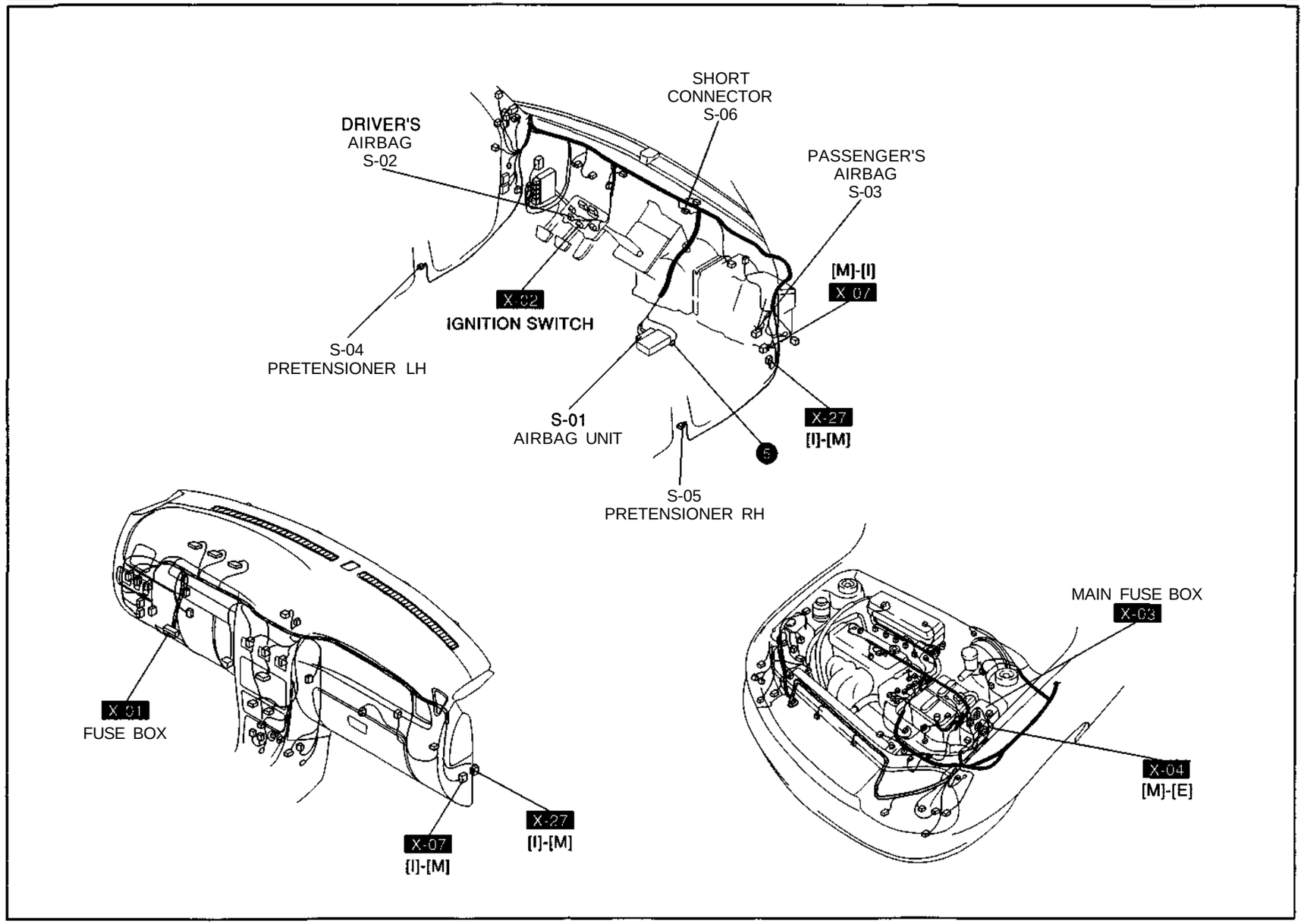
SHORT
CONNECTOR
S-06
DRIVER'S
AIRBAG
S-02
PASSENGER'S
AIRBAG
S-03
[M]-[I]
X-07
X-02
IGNITION SWITCH
S-04
PRETENSIONER LH
S-01
AIRBAG UNIT
X-27
[I]-[M]
S-05
PRETENSIONER RH
MAIN FUSE BOX
X-03
X-01
FUSE BOX
X-04
[M]-[E]
X-27
[I]-[M]
X-07
[I]-[M]

S-2 AIRBAG SYSTEM (WITH SIDE AIRBAG)

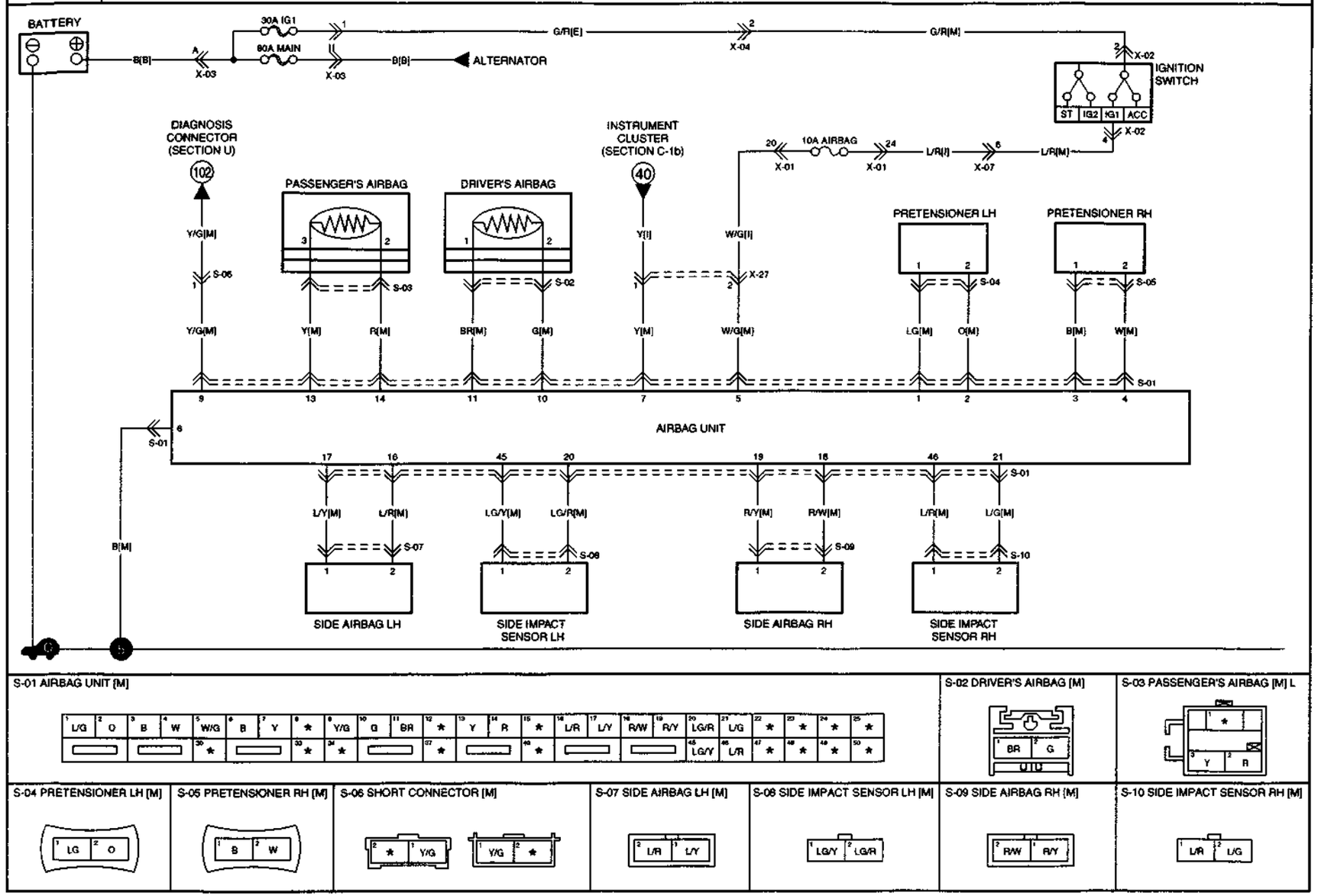

S-01 AIRBAG UNIT [M]

S-02 DRIVER'S AIRBAG [M]

S-03 PASSENGER'S AIRBAG [M] L

S-04 PRETENSIONER LH [M]

S-05 PRETENSIONER RH [M]

S-06 SHORT CONNECTOR [M]

S-07 SIDE AIRBAG LH [M]

S-08 SIDE IMPACT SENSOR LH [M]

S-09 SIDE AIRBAG RH [M]

S-10 SIDE IMPACT SENSOR RH [M]

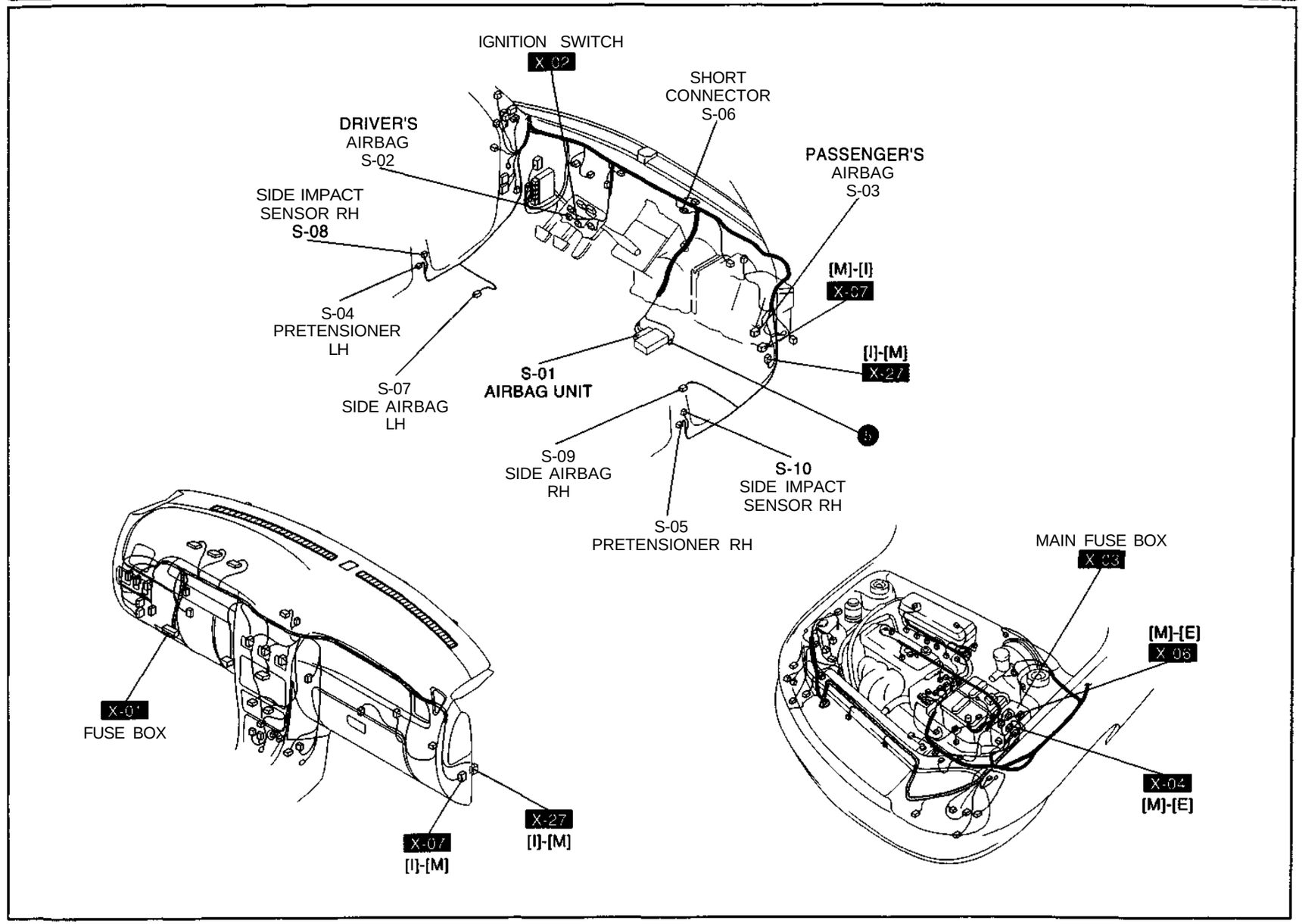
IGNITION SWITCH
X-02
SHORT CONNECTOR S-06
DRIVER'S AIRBAG S-02
PASSENGER'S AIRBAG S-03
SIDE IMPACT SENSOR RH S-08
[M]-[I]
X-07
S-04 PRETENSIONER LH
[I]-[M]
X-27
S-01 AIRBAG UNIT
S-07 SIDE AIRBAG LH
S-09 SIDE AIRBAG RH
S-10 SIDE IMPACT SENSOR RH
S-05 PRETENSIONER RH
MAIN FUSE BOX
X-03
[M]-[E]
X-06
X-01
FUSE BOX
X-04
[M]-[E]
X-27
[I]-[M]
X-07
[I]-[M]

T-1 REAR DEFROSTER, TRUNK ROOM LAMP

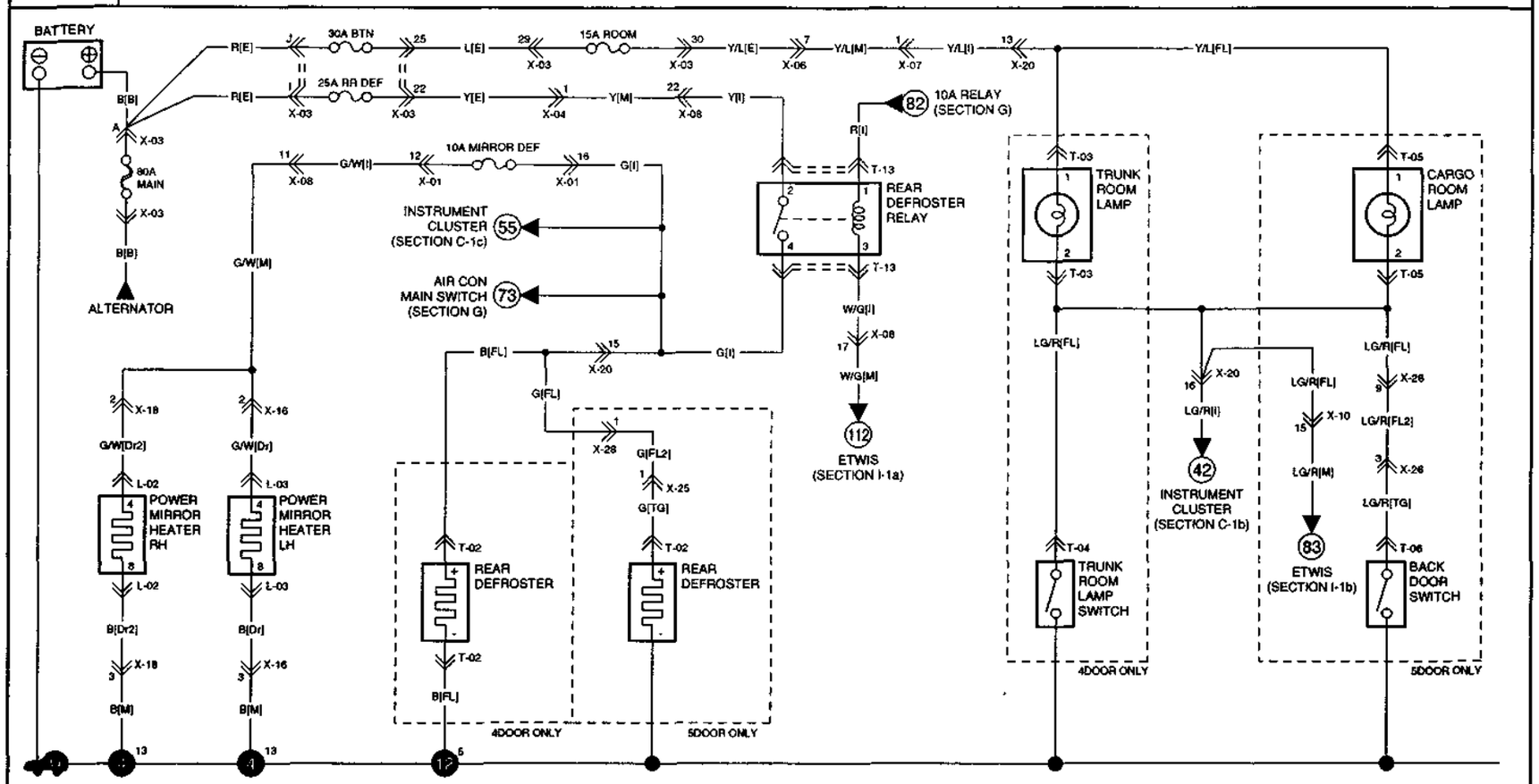

T-02 REAR DEFROSTER [FL] B	T-02 REAR DEFROSTER [TG]	T-03 TRUNK ROOM LAMP [FL]	T-04 TRUNK ROOM LAMP SWITCH [FL]	T-05 CARGO ROOM LAMP [FL]
B (+) / B (-) 4DOOR	G (+) 5DOOR	Y/L, LG/R 4DOOR ONLY	LG/R 4DOOR ONLY	Y/L, LG/R 5DOOR ONLY
T-06 BACK DOOR SWITCH [TG]	**T-13 REAR DEFROSTER RELAY [I]**	**L-02 POWER MIRROR DEFROSTER RH [Dr2]**	**L-03 POWER MIRROR DEFROSTER LH [Dr]**	
LG/R 5DOOR ONLY	R, Y, W/G, G	G, *, *, G/W, R/W, G/R, *, B	G/L, *, *, G/W, G/B, G/R, *, B	

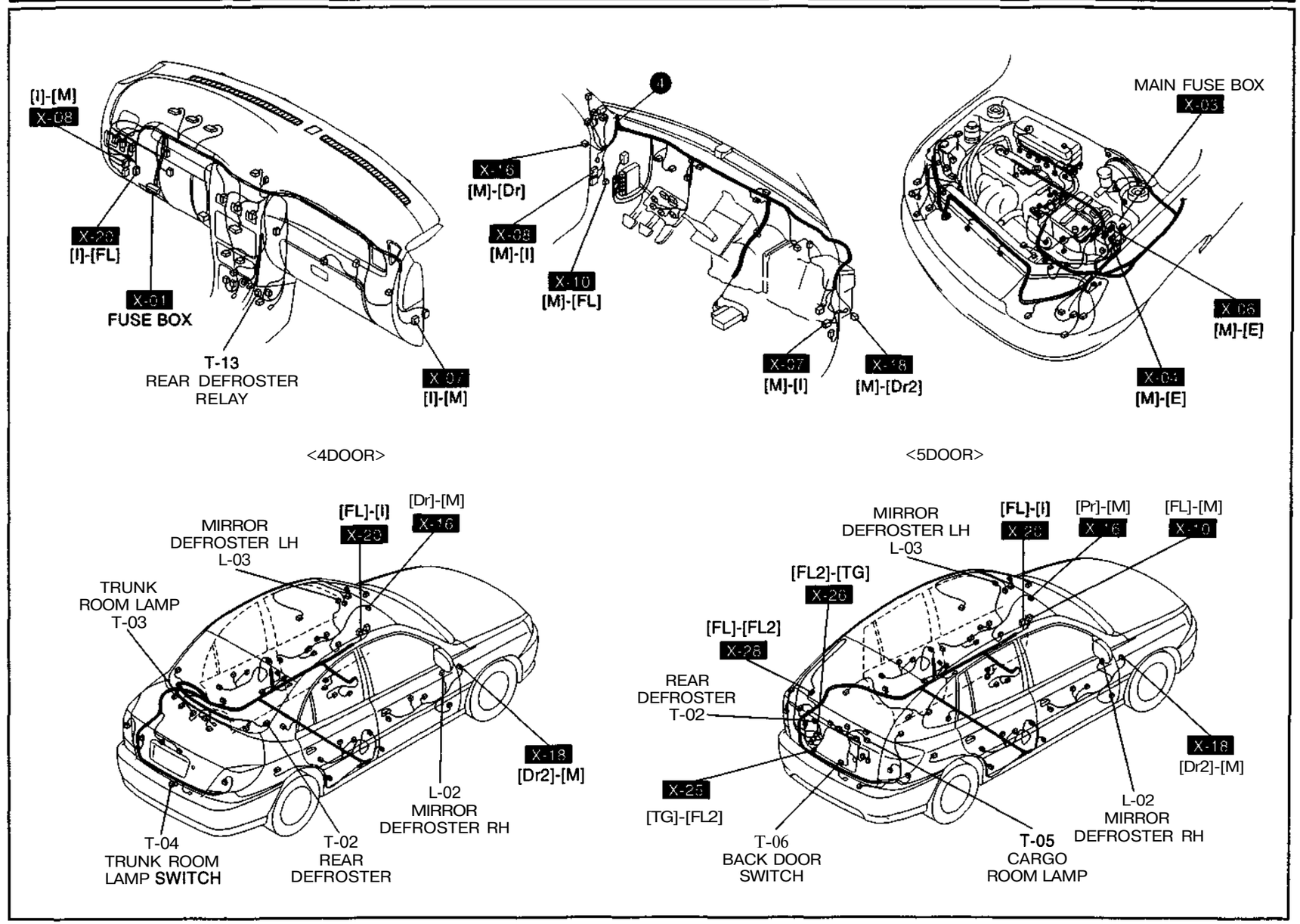
[I]-[M]
X-08
X-29
[I]-[FL]
X-01
FUSE BOX
T-13
REAR DEFROSTER
RELAY
X-07
[I]-[M]
X-16
[M]-[Dr]
X-08
[M]-[I]
X-10
[M]-[FL]
X-07
[M]-[I]
X-18
[M]-[Dr2]
MAIN FUSE BOX
X-03
X-06
[M]-[E]
X-04
[M]-[E]
<4DOOR>
<5DOOR>
MIRROR
DEFROSTER LH
L-03
[FL]-[I]
X-29
[Dr]-[M]
X-16
TRUNK
ROOM LAMP
T-03
X-18
[Dr2]-[M]
L-02
MIRROR
DEFROSTER RH
T-04
TRUNK ROOM
LAMP SWITCH
T-02
REAR
DEFROSTER
MIRROR
DEFROSTER LH
L-03
[FL]-[I]
X-29
[Pr]-[M]
X-16
[FL]-[M]
X-10
[FL2]-[TG]
X-26
[FL]-[FL2]
X-28
REAR
DEFROSTER
T-02
X-18
[Dr2]-[M]
X-25
[TG]-[FL2]
L-02
MIRROR
DEFROSTER RH
T-06
BACK DOOR
SWITCH
T-05
CARGO
ROOM LAMP

T-2 POWER SOCKET, CIGAR LIGHTER, IMMOBILIZER

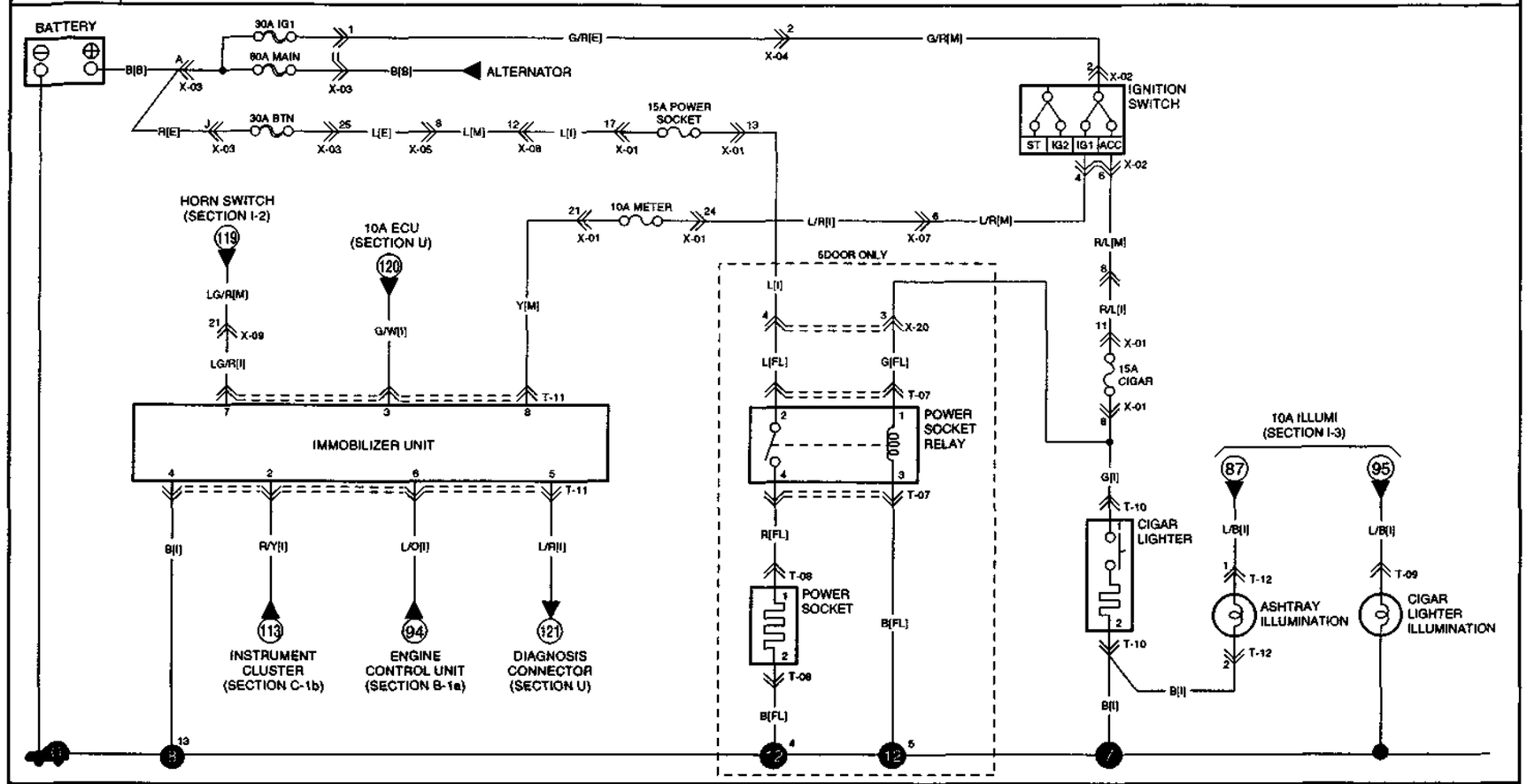

T-07 POWER SOCKET RELAY [FL]	T-08 POWER SOCKET [FL]	T-09 CIGAR LIGHTER ILLUMINATION [I]	T-10 CIGAR LIGHTER [I]	T-11 IMMOBILIZER UNIT [I]
1 G, 2 L, 3 B, 4 R	1 R, 2 B	L/B	1 G, 2 B B	1 *, 2 R/Y, 3 G/W, 4 B, 5 L/R, 6 L/O, 7 LG/R, 8 Y

T-12 ASHTRAY ILLUMINATION [I] B
1 L/B, 2 B

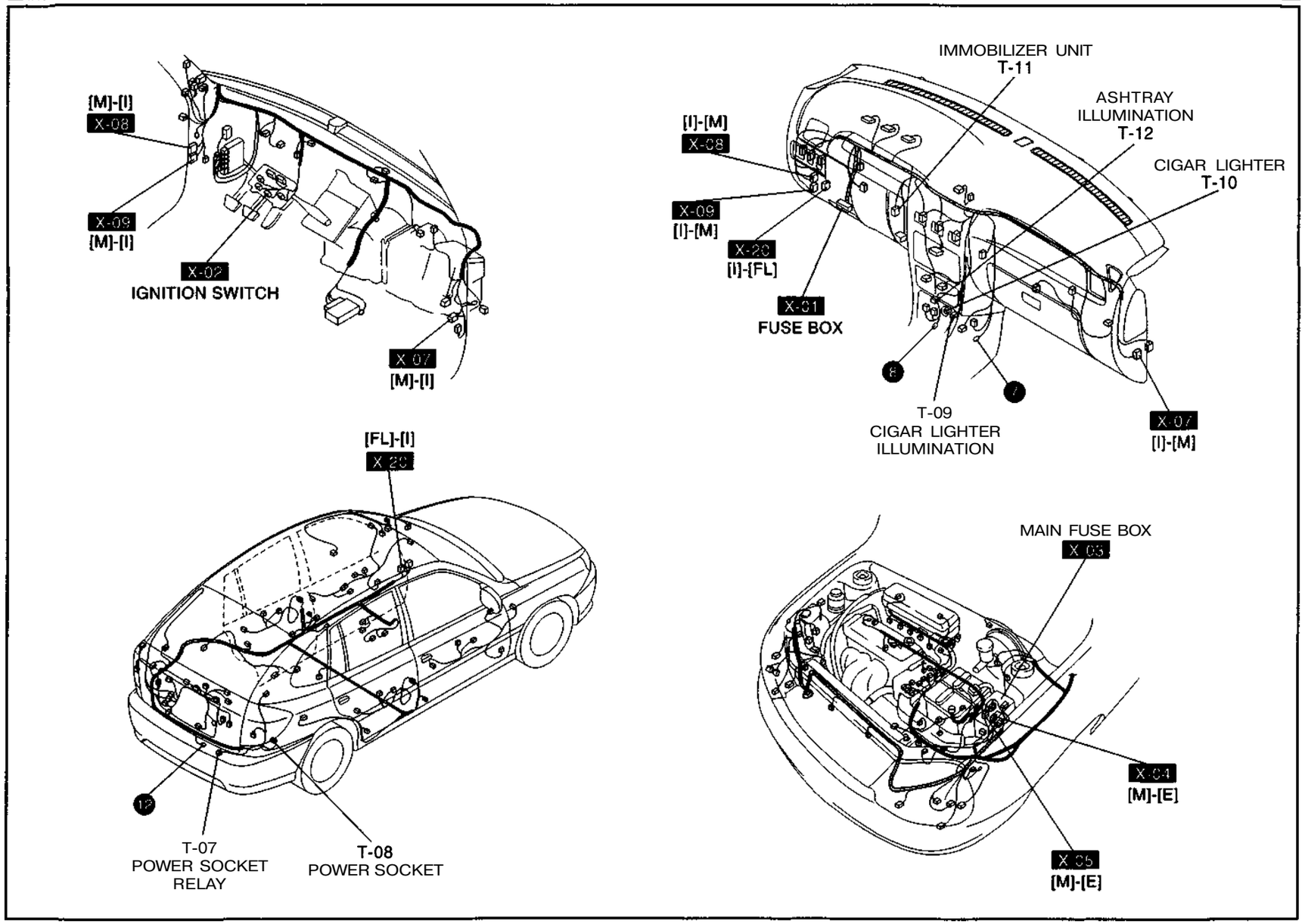
[M]-[I]
X-08
X-09
[M]-[I]
X-02
IGNITION SWITCH
X-07
[M]-[I]
IMMOBILIZER UNIT
T-11
ASHTRAY
ILLUMINATION
T-12
CIGAR LIGHTER
T-10
[I]-[M]
X-08
X-09
[I]-[M]
X-20
[I]-[FL]
X-01
FUSE BOX
8
7
T-09
CIGAR LIGHTER
ILLUMINATION
X-07
[I]-[M]
[FL]-[I]
X-20
12
T-07
POWER SOCKET
RELAY
T-08
POWER SOCKET
MAIN FUSE BOX
X-03
X-04
[M]-[E]
X-05
[M]-[E]

U DIAGNOSIS CONNECTOR, OBD-II CHECK CONNECTOR

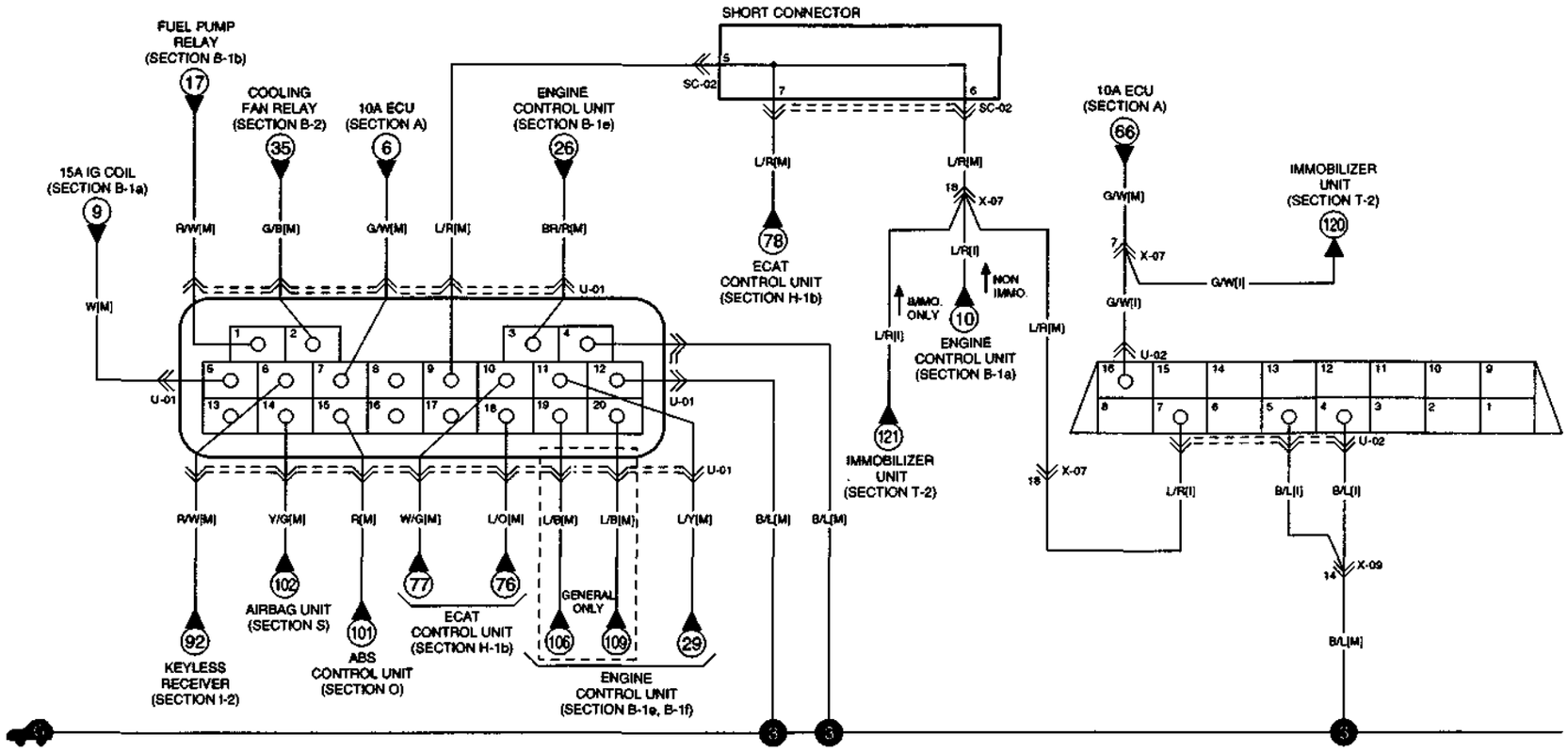

U-01 DIAGNOSIS CONNECTOR [M]

< > : A/T
( ) : GENERAL

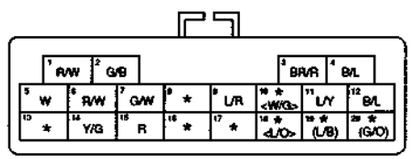

U-02 OBD-II CHECK CONNECTOR [I]

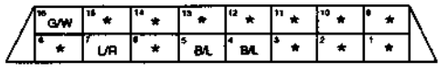

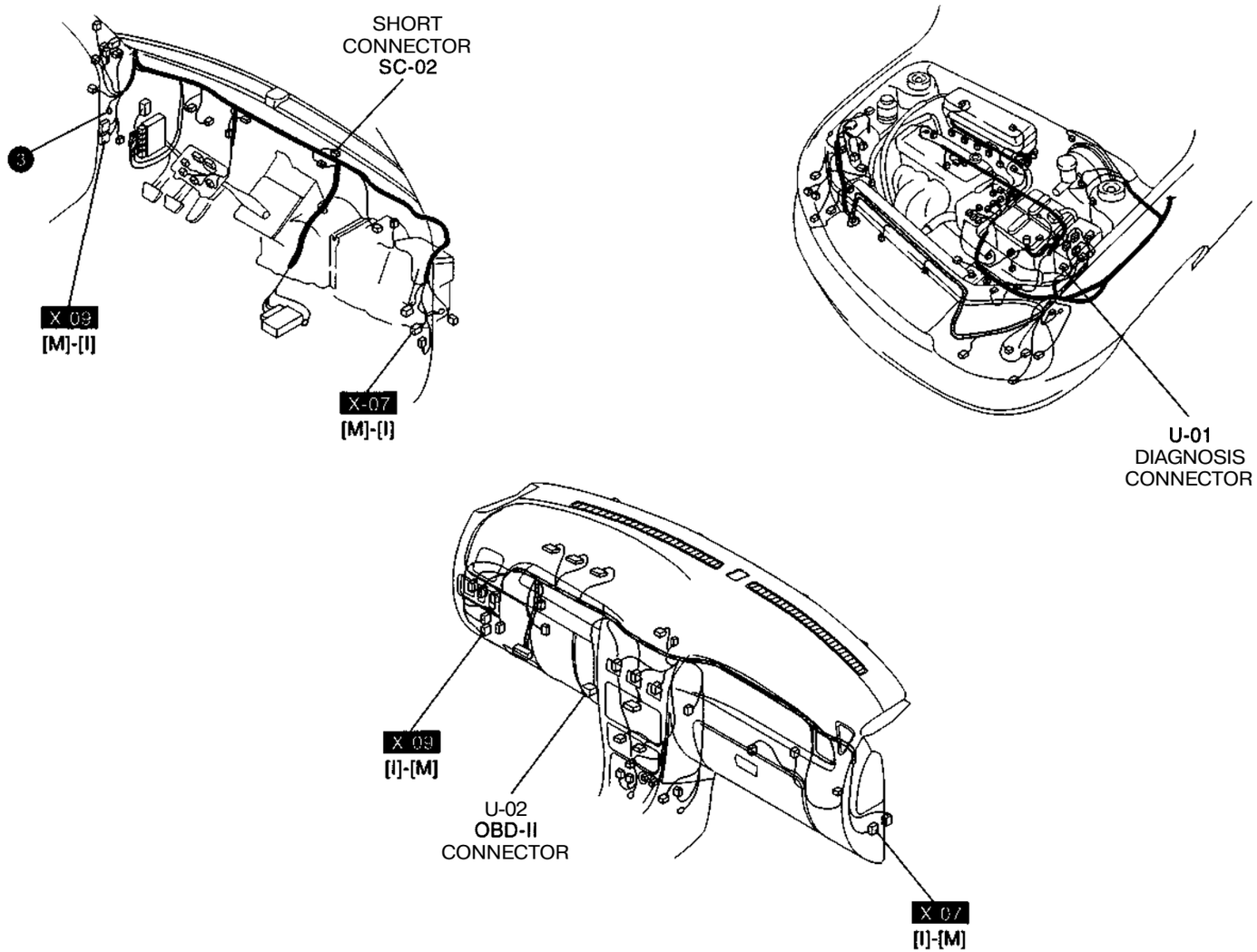
SHORT
CONNECTOR
SC-02
3
X 09
[M]-[I]
X-07
[M]-[I]
U-01
DIAGNOSIS
CONNECTOR
X 09
[I]-[M]
U-02
OBD-II
CONNECTOR
X 07
[I]-[M]

X-1 COMMON CONNECTOR

X-01 PASSENGER COMPARTMENT FUSE BOX [I]

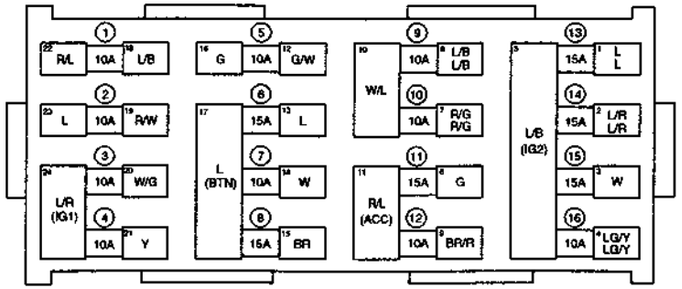

- © 10A ILLUMI
- 0 10A START
- 0 10A A/BAG
- 0 10A METER
- 0 10A MIRROR DEF
- 0 15A POWER SOCKET
- (7) 10A HAZARD
- 0 15A STOP
- 0 10ATAIL(RH)
- © 10A TAIL(LH)
- © 15A CIGAR
- @ 10A AUDIO
- @ 15A WIPER(FRT)
- © 15A WIPER(RR)
- © 15A WARMER
- ® 10A TURN LAMP

X-02 IGNITION SWITCH [M] B

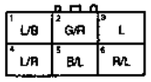

X-03 ENGINE COMPARTMENT FUSE/RELAY BOX [E]

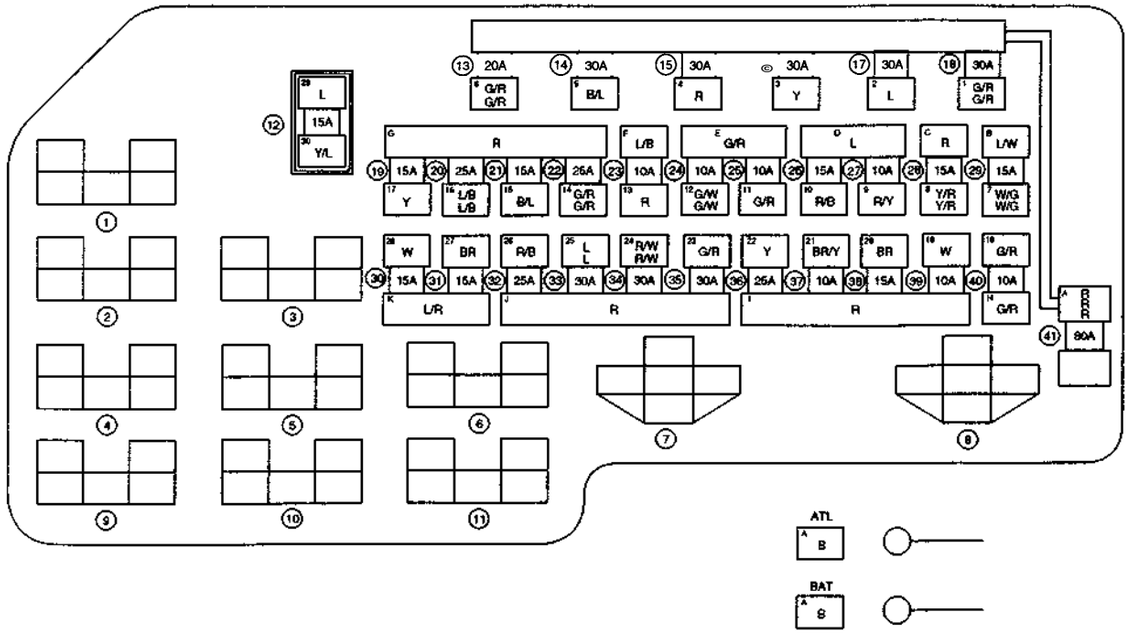

- 0 CONDENSER FAN RELAY
- 0 MAIN RELAY
- 0 TNS RELAY
- 0 HORN RELAY
- 0 COOLING FAN RELAY
- 0 HEAD LAMP RELAY
- 0 POWER WINDOW RELAY
- 0 START RELAY
- 0 AIR CON RELAY
- (10) FOG LAMP RELAY
- © FUEL PUMP RELAY
- @ 15A ROOM
- © 20ACOND.FAN
- © 30A IG2
- @ 30A ABS1
- © 30A COOLING
- © 30A BLOWER
- @ 30A IG1
- © 15AF/FOG
- ® 25A HEAD
- (21) 15A S/ROOF
- (22) 25A MAIN RELAY
- (23) 10A RELAY
- © 10A ECU
- © 10A F/PUMP
- © 15A INJECTOR
- (27) 10A EMS
- © 15A HEAD-LOW
- (29) 15A HEAD-HI
- ® 15A IG COIL
- (31) 15A ABS
- (32) 25A D/LOCK
- ® 30A BTN
- (34) 30A P/WIN
- © 30A ABS2
- (36) 25A RR DEF
- (37) 10A HORN
- (38) 15A TNS
- © 10 Rr. FOG
- @ 10A HLLD
- © 80A MAIN

X-2 COMMON CONNECTOR

X-04 MAIN HARNESS [M] - ENGINE HARNESS [E] B

< > A/T
( ) DRL
{ } HLLD

[M]

1 Y	2 G/R	3 LG/R	4 G/R	5 G/R		6 R/G	7 W/L	8 G/L	9 W	10 L <R>
11 L/W	12 R (R/W)	13 LG/Y	14 W	15 G/W	16 W/R	17 Y/G	18 L/B	19 R/B	20 Y/L	21 BR/Y	22 R/W

[E]

10 R	9 W	8 G/L	7 W/L	6 R/G		5 G/Y	4 G/R	3 LG/R	2 G/R	1 Y
22 R/W	21 BR/Y	20 Y/L	19 R/B	18 L/B	17 Y/G	16 W/R	15 G/W G/W	14 ★ [W] [W]	13 LG/Y	12 R	11 L/W

X-05 MAIN HARNESS [M] -ENGINE HARNESS [E]

( ) DRL

[M]

1 R/Y	2 B/L	3 BR (BR)	4 G/W	5 R		6 G/B G/B	7 R/B	8 L	9 W	10 L/R
11 W/G	12 Y/R		13 L		14 W		15 L/B (L/B)		16 L/B	17 B/L

[E]

10 L/R	9 W	8 L	7 R/B	6 G/B		5 R	4 G/W	3 BR	2 B/L	1 R/Y
17 B/L	16 L/B		15 L/B		14 W		13 L		12 Y/R	11 W/G

X-06 MAIN HARNESS [M] - ENGINE HARNESS [E] L

[ ] REAR FOG

[M]

1 BR/R	2 R/W R/W	3 ★	4 ★	5 L/G		6 R	7 Y/L	8 G	9 R/L	10 L
11 ★ [W]	12 LG/R		13 R/B W		14 Y		15 G/R		16 BR	17 R/G

[E]

10 L	9 R/L	8 G	7 Y/L	6 R		5 L/G	4 ★	3 ★	2 R/W	1 BR/R
17 R/G	16 BR BR		15 G/R		14 Y		13 R/B		12 LG/R	11 W

X-07 MAIN HARNESS [M] - INSTRUMENT PANEL HARNESS [I]

< > A/T

[M]

1 Y/L	2 L/Y	3 <LG/Y>	4 Y	5 R	6 L/R	7 G/W	8 R/L	9 G/Y	10 BR/R	11 L/B
12 G/R	13 ★	14 ★ <R/G>	15 L/B	16 W	17 Y/R	18 L/R	19 Y/L	20 G/W	21 L	22 ★ <L>

[I]

11 L/B	10 BR/R	9 G/Y	8 R/L	7 G/W	6 L/R	5 R	4 Y	3 LG/Y	2 L/Y	1 Y/L
22 L	21 L	20 G/W	19 Y/L	18 L/R	17 Y/R	16 W	15 L/B	14 R/G	13 ★	12 G/R

X-08 MAIN HARNESS [M] - INSTRUMENT PANEL HARNESS [I]

< >. A/T
[ ]: REAR FOG
( ). FRONT FOG

[M]

1 W	2 W	3 ★	4 ★ <G>	5 ★ <L/B>	6 ★ <Y>	7 ★ <R>	8 ★ <L/Y>	9 ★ <L/G>	10 BR	11 G/W
12 L	13 W/G	14 ★	15 G	16 G/R	17 W/G	18 R	19 W/R	20 Y/G	21 L	22 Y
23 B	24 ★	25 R/W	26 ★ [W]	27 ★ [BR/Y]		28 R/W	29 W/G	30 ★	31 ★	32 L/B L/B

[I]

11 G/W	10 BR	9 L/G	8 L/Y	7 R	6 L/R	5 L/B	4 L/W	3 ★	2 ★ (W)	1 W/R
22 Y	21 L	20 Y/G	19 W/R	18 R	17 W/G	16 G/R	15 G/Y	14 ★	13 W/G	12 L
32 L/B	31 ★	30 ★	29 W/G	28 R/W		27 ★ [W]	26 ★ [BR/Y]	25 R/W	24 ★	23 B

X-3 COMMON CONNECTOR

X-09 MAIN HARNESS [M] – INSTRUMENT PANEL HARNESS [I]

< > : A/T
( ) : DRL
[ ] : HLLD
(( )) : IMMOBILIZER

[M]

1 Y	2 LG/Y	3 R	4 W	5 R	6 R/G	7 L/B	8 L/G	9 ★ <R/W>	10 W/R W/R	11 G/L
12 L/O	13 LG/R	14 B/L	15 BR/Y	16 BR/R BR/R	17 Y/G	18 BR	19 R/L (W/L)	20 R/L	21 W/G W/G	22 R/L

[I]

11 G/L	10 W/R	9 R/W	8 L/G	7 L/B	6 R/G	5 R	4 ★ [W]	3 R	2 LG/Y	1 Y
22 R/L	21 W/G	20 R/L	19 W/L	18 BR	17 Y/G	16 BR/R	15 BR/Y	14 B/L B/L	13 ★ ((LG/R))	12 L/G ((L/O))

X-10 MAIN HARNESS [M] ~ FLOOR HARNESS [FL]

< > : A/T
[ ] : 5DOOR
( ) : DRL

[M]

1 ★	2 ★	3 ★	4 ★	5 ★	6 G/O	7 L/O	8 L/R	9 L/Y	10 Y	11 B
12 ★	13 R/W	14 ★	15 ★ [LG/R]	16 L/B	17 R/B	18 G/L	19 G/Y	20 G/W	21 Y/R	22 L/W
23 L	24 G	25 ★	26 L/B (L/W)	27 ★ <G/O>	28 BR	29 B/L	30 BR/R	31 G/R	32 L/B	

[FL]

11 B	10 Y	9 L/Y	8 L/R	7 L/O	6 G/O	5 ★	4 ★	3 ★	2 ★	1 ★
22 L/W	21 Y/R	20 G/W	19 G/Y	18 G/L	17 R/B	16 L/B	15 ★ [LG/R]	14 ★	13 R/W	12 ★
32 L/B	31 G/R	30 BR/R	29 B/L	28 BR	27 ★ <G/O>	26 L/W	25 ★	24 G	23 L	

X-11 MAIN HARNESS [M] – ENGINE HARNESS [E] B

ABS ONLY

[M]

1 LG/R	2 R	3 BR
4 LG/Y	5 G/R	6 ★

[E]

3 BR	2 R	1 LG/R
6 ★	5 G/R	4 LG/Y

X-12 MAIN HARNESS [M] ~ CONTROL HARNESS [C] B

[M]

1 W	2 G	3 L/R	4 BR	5 W	6 G/Y
7 L	8 O	9 Y/G	10 L/R	11 Y	12 R

[C]

6 G/Y	5 W	4 BR	3 L/R	2 G	1 W
12 R	11 Y	10 L/R	9 Y/G	8 O	7 L

X-13 MAIN HARNESS [M] – CONTROL HARNESS [C] B

[M]

1 R/B	2 B	3 R	4 BR
5 Y	6 R/Y	7 ★	8 ★
9 BR	10 W	11 L	12 ★
13 L	14 Y	15 O	16 BR

[C]

4 BR	3 R	2 B	1 R
8 ★	7 ★	6 R/G	5 Y
12 ★	11 L	10 W	9 BR
16 BR	15 O	14 Y	13 L

X-14 MAIN HARNESS [M] ~ BATTERY HARNESS [B] B

[M]

4 B	3 G/R	2 B	1 W
8 ★	7 Y	6 G	5 R/W

[B]

1 W	2 B	3 G/R	4 B
5 R/W	6 G	7 Y	8 ★

X-15 MAIN HARNESS [M] ~ ROOF HARNESS [Rm]

[M]

2 Y/L Y/L			1 B/L
6 W	5 ★	4 B	3 L

[Rm]

1 ★				2 Y/L Y/L
3 L	4 B B	5 ★		6 W

X-4 COMMON CONNECTOR

X-16 MAIN HARNESS [M] - FRONT DOOR LEFT HARNESS [Dr]

< > : 4 BUTTON POWER WINDOW

X-18 MAIN HARNESS [M] - FRONT DOOR RIGHT HARNESS [Dr2]

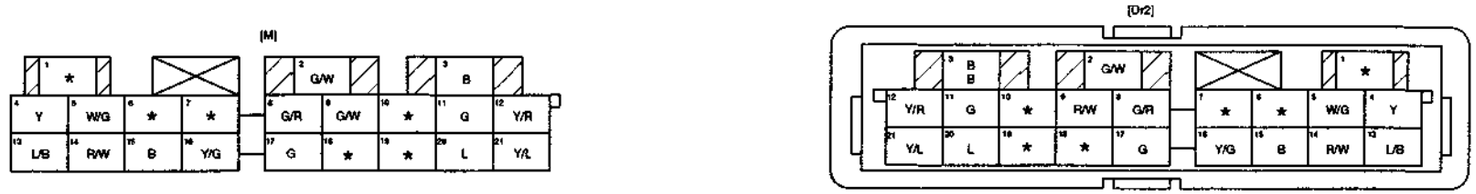

X-20 INSTRUMENT PANEL HARNESS [I] - FLOOR HARNESS [FL] B

( ) : 5DOOR
[ ] : REAR FOG

X-22 FLOOR HARNESS [FL] - REAR DOOR LEFT HARNESS [Dr3]

X-23 FLOOR HARNESS [FL] - REAR DOOR RIGHT HARNESS [Dr4]

X-24 TAIL GATE EXTENSION HARNESS [FL2] - TAIL GATE HARNESS [TG]

X-25 TAIL GATE EXTENSION HARNESS [FL2] - TAIL GATE HARNESS [TG]

X-5 COMMON CONNECTOR

X-26 TAIL GATE EXTENSION HARNESS [FL2] - TAIL GATE HARNESS [TG]

X-27 MAIN HARNESS [M] - INSTRUMENT PANEL HARNESS [I]

X-28 FLOOR HARNESS [FL] - TAIL GATE EXTENSION HARNESS [FL2]

5DOOR ONLY

SC SHORT CONNECTOR

SC 02 SHORT CONNECTOR [M]

< > A/T

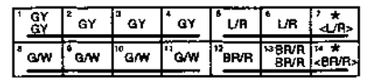

SC-03 SHORT CONNECTOR [M]

< > A/T
( ) ABS

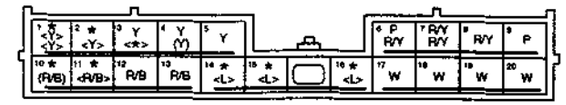

SC 04 SHORT CONNECTOR [M]

< > A/T

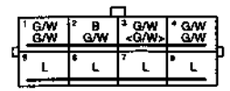

SC-05 SHORT CONNECTOR [M]

< > A/T

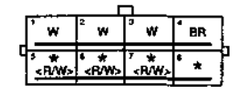

SC-08 SHORT CONNECTOR [FL]

< > SHIFT LOCK

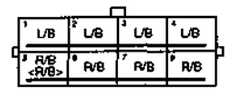

SC-09 SHORT CONNECTOR [I]

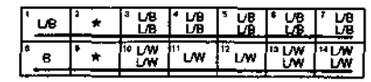

SC-10 SHORT CONNECTOR [E]